Wall-mounted air intake/exhaust vent with drip

UVLA

Description

UVLA air intake/exhaust vents are designed for use in mechanical or gravity ventilation systems with heat recovery. The half-dome cowl prevents air back flow from the gusts outside. The louvres force the exhaust air flow down. The UVLA air intake/exhaust vents have a rubber seal and fitting clamps for easy installation. The product provides a highly aesthetic finish and a long service life. The product is suitable for outdoor and indoor use.

Available materials - Product code examples
UVLA -...- polished stainless steel

Product code example
Product code: **UVLA - aaa**

type
Ød

Dimensions

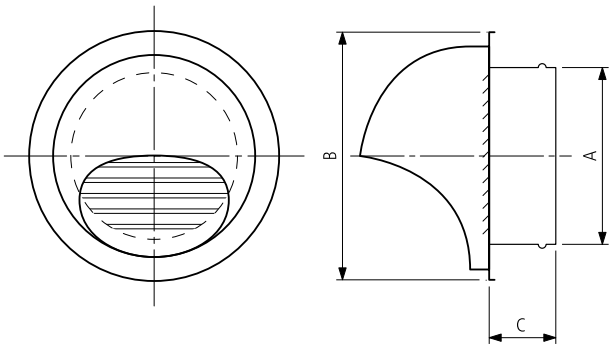

Ød [mm]	A [mm]	B [mm]	C [mm]	Effective area [m²]
100	95	148	48	0.005
125	120	188	48	0.008
150	145	210	56	0.012
160	155	210	62	0.014
180	175	272	66	0.016
200	195	272	70	0.018
250	245	355	75	b.d.

Drip styles

UVLA air exhaust vents feature a slim and a wide drip.

ALNOR® ventilation systems
is a registered trademark protected by a technical patent. All modification rights reserved.