Contents

Download Wentyle
Download AlnorCAM
B2B ordering

SMOKE system
Single-compartment circular smoke ventilation ducts with components

ALNOR reserves the right to modify technical specifications in line with the policy of continuous product improvement.

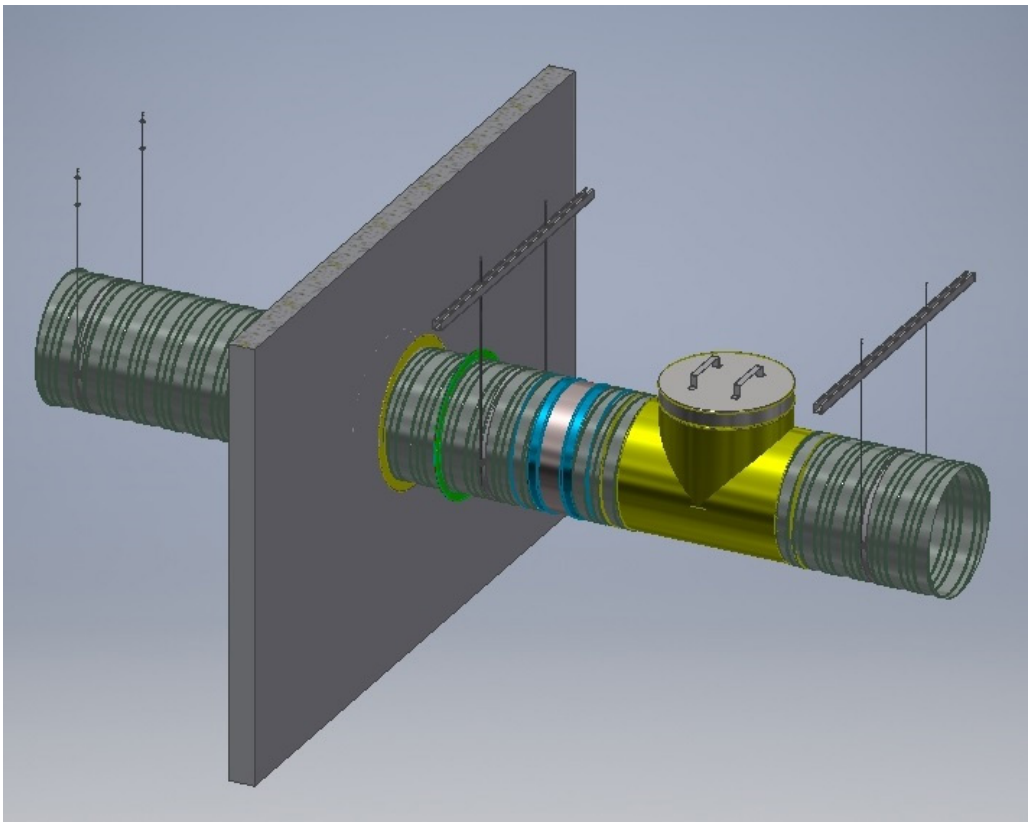

About the system

The system of single-compartment steel, circular smoke extraction ducts in E_{600} 120 (h_o) S1500 single fire resistance class is intended to be used in the construction industry in a horizontal system as elements creating a smoke extraction ventilation system or combined ventilation, fulfilling at the same time the functions of general and smoke extraction ventilation, assuming that they serve only the compartment in which they have been installed. Systems serving one fire compartment may be independent systems or may be combined with a collective, multi-compartment system. The main task of the smoke extraction systems is to remove hot gases and smoke from the area covered by the fire in order to facilitate the evacuation of people and to enable the extinguishing action and the evacuation of people from the area at risk, while complying with the criteria of fire and/or smoke tightness specified under conditions of exposure to a temperature of 600°C.

The system of smoke extraction ducts consists of:

- standard straight duct sections and round fittings (bends, end caps, T-pieces, reducers, etc.), of a diameter from Ø100 to Ø1000mm,
- flexible duct connectors, type ILA-NSL-SMO, ILA-K-SMO,
- circular silencers, type SIL-GL-SMO,
- smoke extraction grilles, type SGR-SMO-0H (0V).

Intended use

They can also be used in mixed-type installations, which simultaneously perform the function of residential ventilation and smoke extraction, provided that, in the smoke extraction function, they operate only in the fire zone in which they are installed. In the case of combination systems, the smoke extraction function is primary. They also may be independent systems or may be combined with a collective, multi-compartment system. It should be remembered that passing through a fire compartment is treated as an element of a multi-compartment system.

Application

SMOKE system single-compartment circular smoke extraction ducts have the following application areas:

- Smoke extraction ducts are designed for single fire compartments,
- The smoke extraction ducts are available in diameter range is from Ø100 to Ø1000mm,
- The maximum temperature of the fire gases discharged through the SMOKE system ducts is 600 °C,
- Individual duct sections and ventilation fittings of SMOKE system ducts may only be installed horizontally (vertical installation is not permitted),
- The scope of application of smoke extraction ducts includes ventilation systems with operating pressure from -1500 Pa to +500 Pa.

Sealing

Standard

The SMOKE system steel, single-compartment, round smoke extraction ducts, together with their components, are classified according to the PN-EN 13501-4+A1:2016 in $E_{600}120$ (h_o) S1500single fire resistance class, and as non-combustible and non-fire spreading.

Seals

All male components of the SMOKE system smoke extraction ducts are equipped with GASK double lip seals for ventilation fittings made of EPDM and a 1.8 mm thick and 10 mm wide intumescent seal.

The GASK seal is made of EPDM material, which is resistant to ozone, UV radiation and temperature fluctuations in the range of -30%˚C÷+100˚C. It is fastened at the end of the male smoke extraction coupling through its rolled-up, tightened edge.

The operation of the GASK seal is shown in the figure below.

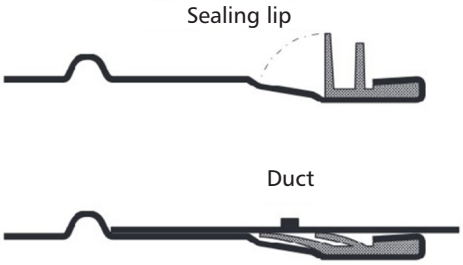

GASK seal type depending on the diameter range

80-280 mm

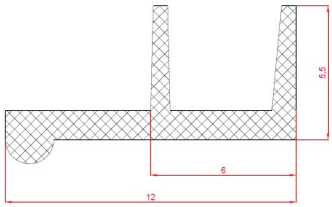

300-500 mm

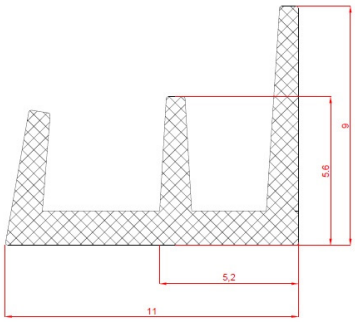

560-1000 mm

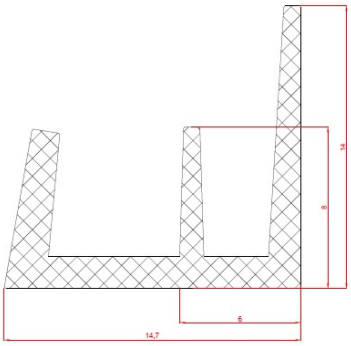

A 10 mm thick and 10 mm wide **intumescent seal**, under the influence of high temperature of about 180˚C, increases its volume several times, causing sealing of the system during a fire so that hot gases and smoke do not escape to the outside and so that the vacuum for their discharge is maintained.

Airtightness

The components of the SMOKE system circular smoke extraction duct components meet the requirements of airtightness class D if all recommendations for correct installation, transport, storage, etc. are followed.

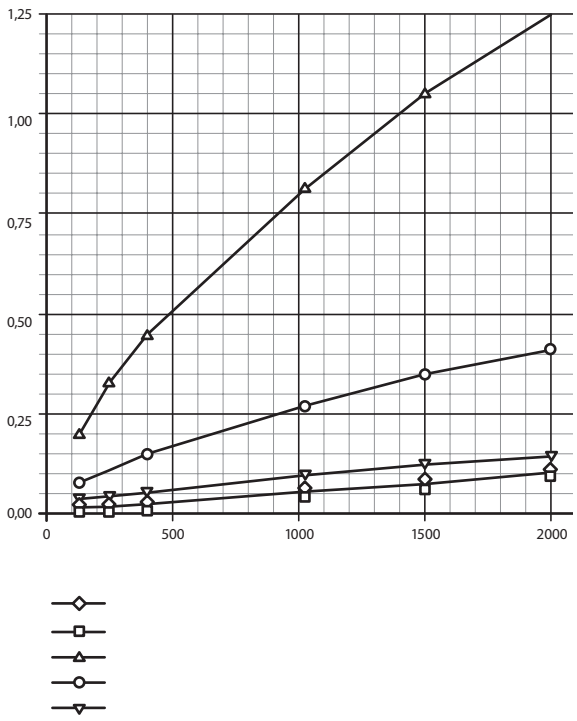

Tolerances for dimensions

Tolerances for fittings dimensions:

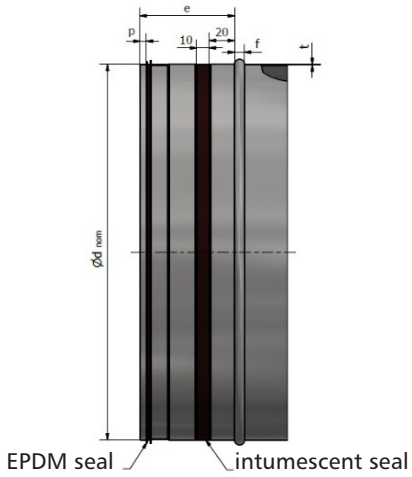

Fitting diameter $Ød_{nom}$. [mm]	Sheet thickness t [mm]	Width f [mm]	Distance e [mm]	Distance p [mm]	Tolerance [mm]	
100	0.7	8	55	7	+0	-6
112	0.7	8	55	7	+0	-6
125	0.7	8	55	7	+0	-6
140	0.7	8	55	7	+0	-6
150	0.7	8	55	7	+0	-6
160	0.7	8	55	7	+0	-6
180	0.7	8	55	7	+0	-6
200	0.7	8	55	7	+0	-6
224	0.7	8	55	7	+0	-6
250	0.7	8	55	7	+0	-6
280	0.7	8	55	7	+0	-6
300	0.7	8	55	7	+0	-6
315	0.7	8	55	7	+0	-6
355	0.7	8	55	7	+0	-6
400	0.7	8	55	7	+0	-6
450	0.7	8	75	7	+0	-10
500	0.7	8	75	7	+0	-10
560	0.7	8	75	9	+0	-10
600	0.7	8	75	9	+0	-10
630	0.7	8	75	9	+0	-10
710	0.7	10	100	9	+0	-10
800	0.9	10	100	9	+0	-10
900	0.9	12	100	9	+0	-10
1000	0.9	12	115	9	+0	-20

Tolerances

Tolerances for diameters

Tolerance for ducts and female couplings		
diameter $Ød_{nom}$ *[mm]*	*inner diameter* $Ød_{min}$ - $Ød_{max}$ *[mm]*	*sheet thickness* t_{nom} *[mm]*
100	100.0-100.5	0.7
112	112.0-112.5	0.7
125	125.0-125.5	0.7
140	140.0-140.6	0.7
150	150.0-150.6	0.7
160	160.0-160.6	0.7
180	180.0-180.7	0.7
200	200.0-200.7	0.7
224	224.0-224.8	0.7
250	250.0-250.8	0.7
280	280.0-280.9	0.7
300	300.0-300.9	0.7
315	315.0-315.9	0.7
355	355.0-356.0	0.7
400	400.0-401.0	0.7
450	450.0-451.1	0.7
500	500.0-501.1	0.7
560	560.0-561.2	0.7
600	600.0-601.2	0.7
630	630.0-631.2	0.7
710	710.0-711.5	0.7
800	800.0-801.6	0.9
900	900.0-902.0	0.9
1000	1000.0-1002.0	0.9

Tolerances for male couplings		
diameter $Ød_{nom}$ *[mm]*	*outer diameter* $Ød_{min}$ - $Ød_{max}$ *[mm]*	*sheet thickness* t_{nom} *[mm]*
100	98.8-99.3	0.7
112	110.5-111.3	0.7
125	123.8-124.3	0.7
140	138.7-139.3	0.7
150	148.7-149.3	0.7
160	158.7-159.3	0.7
180	178.6-179.3	0.7
200	198.6-199.3	0.7
224	222.5-223.3	0.7
250	248.5-249.3	0.7
280	278.4-279.3	0.7
300	298.4-299.3	0.7
315	313.4-314.3	0.7
355	353.3-354.3	0.7
400	398.3-399.3	0.7
450	448.2-449.3	0.7
500	498.2-499.3	0.7
560	558.1-559.3	0.7
600	598.2-599.3	0.7
630	628.1-629.3	0.7
710	708.0-709.3	0.7
800	798.0-799.3	0.9
900	897.9-899.3	0.9
1000	997.9-999.3	0.9

Tolerances for sizes: L, H, r, rm, a

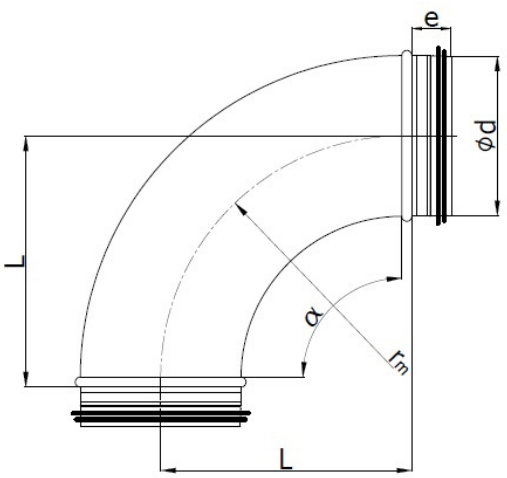

Sizes: L, r, rm, a	*Tolerance [mm]*
≤15 mm	±3
15 - 100 mm	±7
>100 mm	+10 -15
L (ducts)	± 0,005 L
a	± 2°

Sealant

For sealing all components that are part of the SMOKE system smoke extraction ducts, in the places of welding and other joints, e.g. on fabric stitching in flexible duct connectors, we apply, from the inside, and in the case of flexible duct connectors from both sides, a high-temperature sealing compound (e.g. one-component fire retardant flexible silicone sealant with neutral hardening for internal and external use).

Assembly

The SMOKE system smoke extraction ducts should be installed according to the guidelines contained in the OMM, taking care of both the installers and the assembled system. Only the correct connection and installation will guarantee the correct functioning of the system in case of fire.
The smoke extraction ducts and other installation elements of the ventilation system should be made exclusively of non-combustible materials.
The SMOKE system ducts may only be installed in systems with a horizontal orientation. This means that the section of the system cannot be suspended from the vertical structure and in the vertical position.
The thermal or acoustic insulation of the SMOKE system ducts is acceptable for use on the outside of the ducts. It must be made in a way which guarantees:

- no damage to the structure and airtightness of ducts
- no spread of fire

In case of insulation - identification elements (stick-on labels) should be placed on the outer jacket for identification purposes.

Connection of the SMOKE system smoke extraction duct components - the male-female connection:

If necessary, cut the straight ducts SPR-Z-SMO to the required size with the cutting disc of the angle grinder, taking into account the length of the installation elements (in the male-female connection, the male piece fits into the female piece - dimension "e"). The cut must be perpendicular to the duct axis. Remember to wear safety goggles when cutting. Remove burrs and sharp edges using a file or other suitable tool. Clean the inside of the duct from residual chips.
The prepared ducts should be mounted by inserting the male coupling into the female one, turning it and pressing it so that the female coupling part stops at the male coupling stop fold. Then install self-drilling screws (Table 7.) around the perimeter to prevent them from slipping out. For a better fit, the screws should be installed in the correct order, opposite each other in a crosswise direction. Mount the screws 10 mm from the duct edge and the stop fold on the fitting.

Correct installation of smoke extraction ducts:



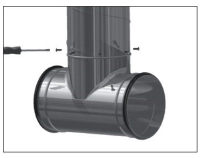

Size and number of screws depending on the diameter of the smoke extraction duct:

Diameter Ød [mm]	*Minimum screw size*	*Minimum number of screws*
100÷280	ST 3,2x13	4
300÷500	ST 3,2x13	8
560÷1000	ST 4,2x13	12

Connection of the SMOKE system smoke extraction duct components - flange connection:

Smoke extraction systems can be connected to each other using FLS flanges. In order to do so, the FLS flange should be slid onto the ILSL-SMO male coupling and then inserted into the female coupling (SPR-Z-SMO, MSF-SMO) according to the installation instructions as in the previous point and Tables 6 and 7. The flanges must be bolted using SRS-M8 bolts, NKS-M8 nuts, PDS-8 washers, using between them a flange gasket made of 1260˚C ceramic fibre paper with a thickness of 6 mm, with the same dimensions as the FLS flange.

Technical data of FLS flanges and flange gaskets made of ceramic fibre paper:

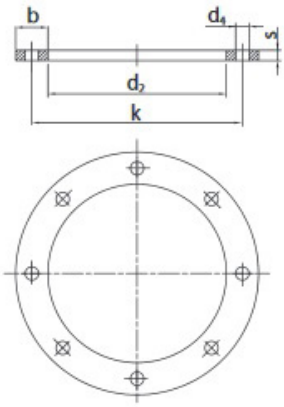

$Ød_{nom}$ [mm]	*$Ød_2$ [mm]*	*b x s- FLS flange*	*b x s- ceramic paper*	*Øk [mm]*	*$Ød_4$ [mm]*	*Number of holes [pcs.]*
100	102	25x3	25x6	132	8.5	4
112	114	25x3	25x6	144	8.5	4
125	127	25x3	25x6	157	8.5	4
140	142	25x4	25x6	172	8.5	6
150	152	25x4	25x6	182	8.5	6
160	162	25x4	25x6	192	8.5	6
180	182	25x4	25x6	212	8.5	6
200	203	25x4	25x6	233	8.5	6
224	227	25x4	25x6	257	8.5	6
250	253	25x4	25x6	283	8.5	6
280	283	30x4	30x6	317	8.5	8
300	303	30x4	30x6	337	8.5	8
315	318	30x4	30x6	352	8.5	8
355	358	30x4	30x6	392	8.5	8
400	404	30x4	30x6	438	8.5	8

Assembly of SMOKE System ducts and fittings

$Ød_{nom}$ [mm]	$Ød_2$ [mm]	b x s- kołnierz FLS	b x s- papier ceramiczny	Øk [mm]	$Ød_4$ [mm]	Number of holes [pcs.]
450	454	30x4	30x6	488	8,5	8
500	504	30x4	30x6	538	8,5	8
560	564	35x4	35x6	600	8,5	12
600	604	35x4	35x6	640	8,5	12
630	634	35x4	35x6	670	8,5	12
710	714	35x4	35x6	750	8,5	12
800	804	35x4	35x6	840	8,5	16
900	904	35x4	35x6	940	8,5	16
1000	1005	35x4	35x6	1041	8,5	16

Suspension of SMOKE System ducts:

CLR suspension rings, PG threaded rods, TK drop-in anchors, NKS nuts, PDS-P and PDS washers are used to suspend ducts to the ceiling. At least one suspension ring should be placed as close as possible to the places where the ducts are connected at least 100 mm from the edge, but not more than 500 mm from the edge (it is recommended to install suspension clamps on each side of the joint). The distance between two suspension elements must not exceed 2000mm.

Types of suspension rings depending on the duct:
in duct diameter range from 100 to 400 mm

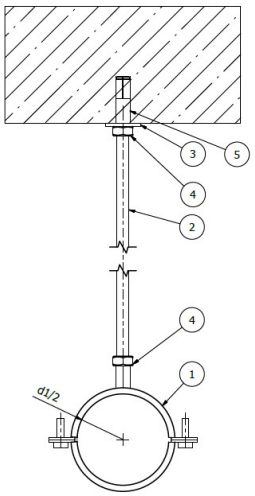

1. CLR - 2 mm thick and 20mm wide galvanized steel suspension ring.
2. PG8 - galvanized steel threaded rod.
3. PDS-P-8 - galvanized steel round washer DIN 9021.
4. NKS-M8 - galvanized steel hexagon nut.
5. TK8-3 or TK8-4 - steel drop-in anchors.

in duct diameter range from 450 to 1000 mm

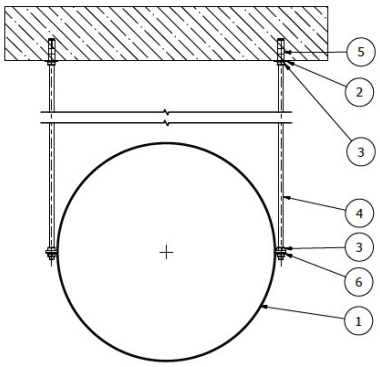

1. CLR - 2.5 mm thick and 25 mm wide galvanized steel suspension ring.
2. PDS-P-8 - galvanized steel round washer DIN 9021.
3. NKS-M8 - galvanized steel hexagon nut.
4. PG8 - galvanized steel threaded rod.
5. TK8-3 or TK8-4 - steel drop-in anchors.
6. PDS-8 - galvanized steel round washer DIN 125-1A.

Types of fixing, duct suspensions:

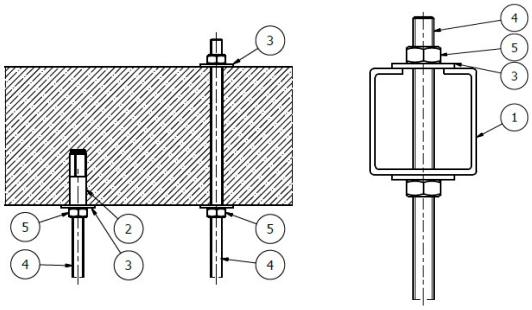

1. LDB – fixing rail.
2. TK8-3 lub TK8-4 – steel drop-in anchor.
3. PDS-P-8 – galvanized steel round washer DIN 9021.
4. PG8 – galvanized steel threaded rod.
5. NKS-M8 – galvanized steel hexagon nut.

Technical data and specifications

Technical data and application of suspension system elements depending on diameters

D [mm]	*Threaded rod*	*Load capacity of anchors [kN]*	*Drop-in anchors*	*Suspension ring*	*Load capacity of suspension rings [kN]*	*Washer DIN 9021*	*Washer DIN 125-1A*	*Nut DIN 934*	*Fixing rail*
100	PG8 (M8)	0.7	TK8-3 lub TK8-4 (M8)	CLR-100	0.45	PDS-P-8	PDS-8	NKS-M8	LDB 30-30-1,5
112				CLR-112	0.45				
125				CLR-125	0.45				
140				CLR-140	0.45				
150				CLR-150	0.45				
160				CLR-160	0.38				
180				CLR-180	0.38				
200				CLR-200	0.38				
224				CLR-224	0.36				
250				CLR-250	0.36				
280				CLR-280	0.36				
300				CLR-300	0.36				
315				CLR-315	0.36				
355				CLR-355	0.32				
400				CLR-400	0.32				
450				CLR-450	0.42				LDB 41-41-2
500				CLR-500	0.40				
560				CLR-560	0.40				
600				CLR-600	0.40				
630				CLR-630	0.40				
710				CLR-710	0.40				
800				CLR-800	0.40				
900				CLR-900	0.40				
1000				CLR-1000	0.40				

Marking

All components of the SMOKE system smoke extraction ducts can be clearly identified by the permanent red-orange marking (in the form of a stick-on label), which is the product's control marking.
Each section of the smoke extraction ductwork must be marked with the following information:

- Name and identification number of the manufacturer
- Model, type
- Number of this standard and year of its publication (i.e. EN 12101-7:2011) with a reference to the general product name "Fire ventilation duct section"
- Fire resistance classification and other related information according to EN 13501-4
- In case the section of the fire ventilation duct is classified as "S" (EN 13501-4) the word smoke-proof shall be added
- Production date (month and year)

Classification

Classification according to EN 13501-4:2016 standard:

E_{600} 120 (h_o) S1500 single

- Fire resistance at 600°C
- for 120 min
- horizontal installation
- S=smoke leakage <5m³/(h•m²)
- negative pressure 1500Pa
- single-compartment application

Label example:

Spiral smoke extraction duct

SPR-Z-SMO

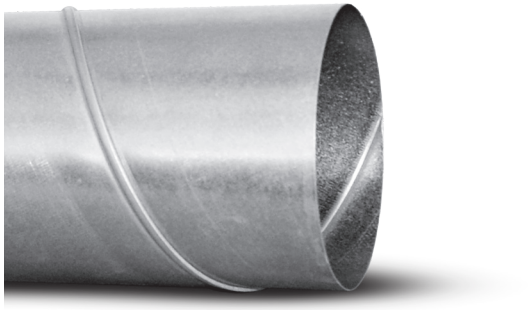

Description

SPR-Z-SMO SMOKE system spiral circular duct, fire resistance class:E_{600} 120 (h_o) S1500 single, designed for single-compartment smoke extraction systems and combined (dual-function) systems. Made of galvanized steel sheet DX51D+Z275 according to PN-EN10346:2011, thickness 0.7mm for diameters from 100-710mm, 0.9mm for diameters from 800-1000mm. The maximum length of a straight duct is 6000mm. Spiral ducts meet the requirements of airtightness class D in accordance with PN-EN 12237.
In the whole range of diameters they are made as spiral lockseamed ducts made of 137mm wide sheet metal sheet, additionally, from the diameter of 250 to 1000mm, they are corrugated;

SPR-Z-SMO ducts are produced in standard lengths L=3m and L=6m.
Order example: SPR-Z-SMO-200-070-0300

Product code example:
Product code: **SPR-Z-SMO - aaa - bbb - ccc**

type
diameter Ød
thickness
length

Dimensions

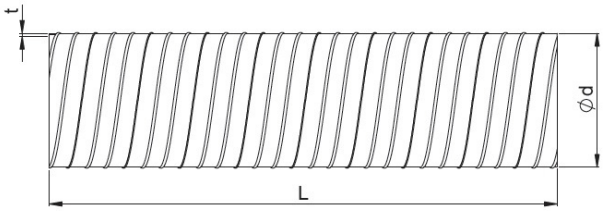

Shape of duct depending on diameter:
100 - 224mm

250 - 1000mm

$Ød_{nom}$ [mm]	Thickness t [mm]	Length L [m]	πd [m]	$\frac{\pi d^2}{4}$ [m²]
100	0.7	6	0.314	0.008
112	0.7	6	0.352	0.010
125	0.7	6	0.393	0.012
140	0.7	6	0.440	0.015
150	0.7	6	0.471	0.018
160	0.7	6	0.502	0.020
180	0.7	6	0.565	0.025
200	0.7	6	0.628	0.031
224	0.7	6	0.703	0.039
250	0.7	6	0.785	0.049
280	0.7	6	0.879	0.062
300	0.7	6	0.942	0.071
315	0.7	6	0.989	0.078
355	0.7	6	1.115	0.099
400	0.7	6	1.256	0.126
450	0.7	6	1.413	0.159
500	0.7	6	1.570	0.196
560	0.7	6	1.758	0.246
600	0.7	6	1.884	0.283
630	0.7	6	1.978	0.312
710	0.7	6	2.229	0.396
800	0.9	3	2.512	0.503
900	0.9	3	2.826	0.636
1000	0.9	3	3.140	0.785

Spiral smoke extraction duct

SPR-Z-SMO

Technical specification

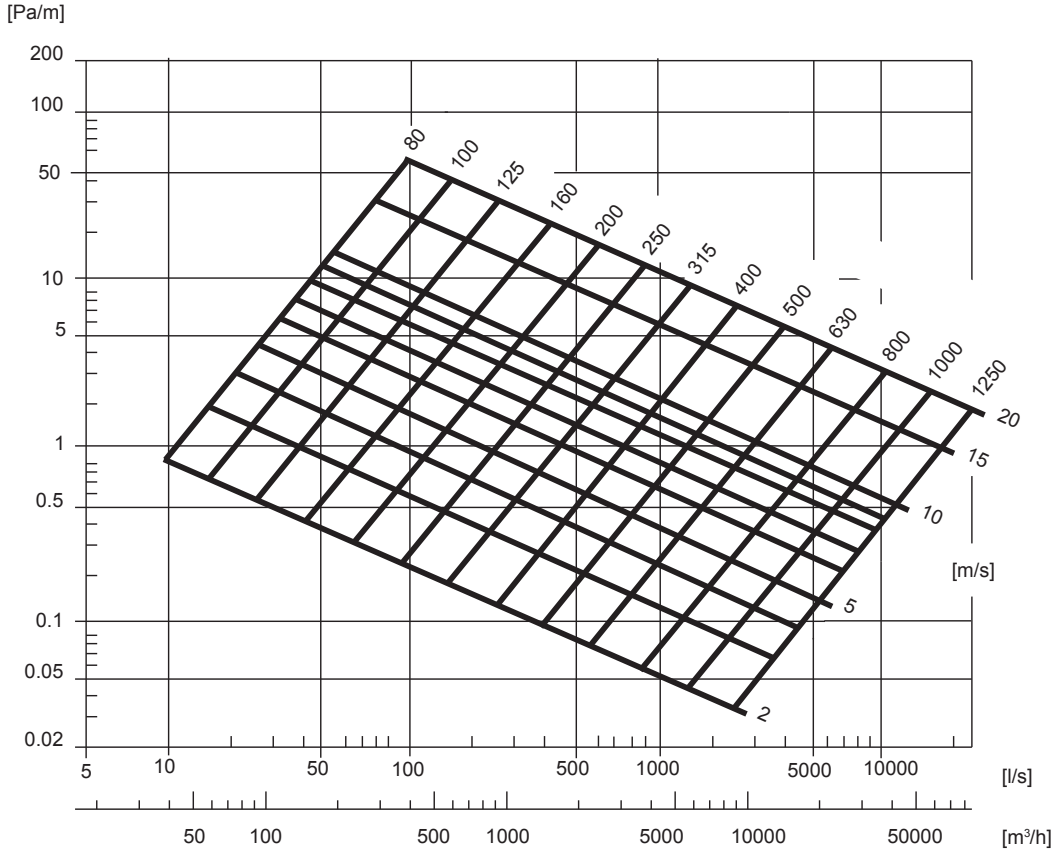

Smoke extraction segmented bend

BSL-SMO-90

Description

BSL-SMO segmented male bend, fire resistance class:E_{600} 120 (h_o) S1500 single, designed for single-compartment smoke extraction systems and combined (dual-function) systems. The bend with a standard radius rm=d1 is equipped with GASK - double lip seals for ventilation fittings made of EPDM and a 1.8 mm thick and 10 mm wide intumescent seal. Welding points and other joints are covered with high-temperature sealant. SMOKE System fittings are available in diameters from 100 to 1000 mm.

Order example: BSL-SMO-200-90

Product code example:

Product code: **BSL-SMO - aaa - bbb**

type
diameter Ød$_1$
angle

Dimensions

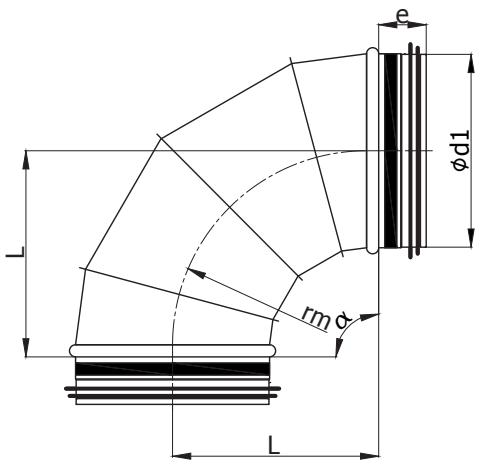

Diameter Ød$_1$ [mm]	*L [mm]*	*Weight [kg]*
100	100	0.54
125	125	0.74
140	140	0.88
150	150	0.99
160	160	1.10
180	180	1.33
200	200	1.59
224	224	1.94
250	250	2.33
280	280	2.84
300	300	3.28
315	315	3.58
355	355	4.42
400	400	5.48
450	450	7.09
500	500	8.56
560	560	10.66
600	600	12.12
630	630	13.21
710	710	17.29
800	800	27.78
900	900	34.46
1000	1000	42.77

Smoke extraction segmented bend

BSL-SMO-90

Technical specification

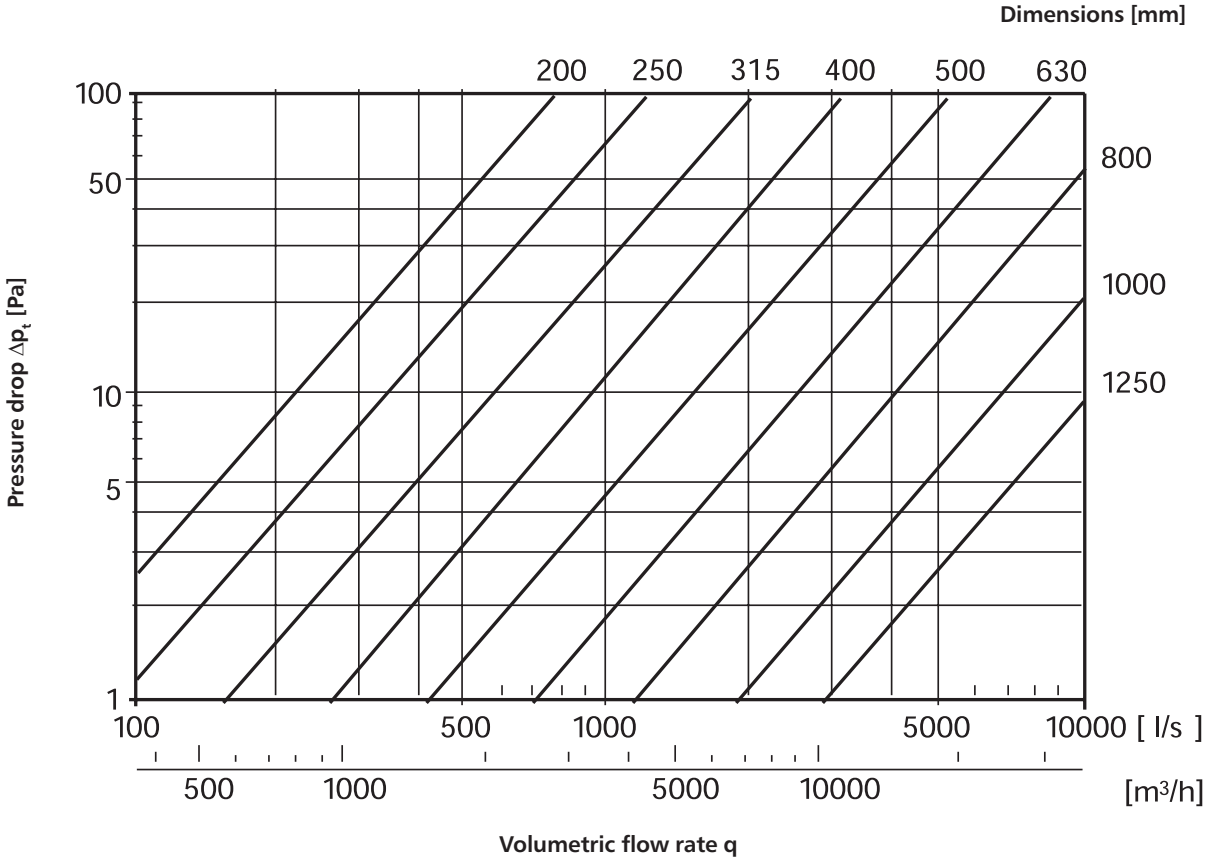

Smoke extraction segmented bend

BSL-SMO-45

Description

BSL-SMO-45 segmented male bend, fire resistance class: E_{600} 120 (h_o) S1500 single, designed for single-compartment smoke extraction systems and combined (dual-function) systems. The bend with a standard radius rm=d1 is equipped with GASK double lip seals for ventilation fittings made of EPDM and a 1.8 mm thick and 10 mm wide intumescent seal. Welding points and other joints are covered with high-temperature sealant. SMOKE System fittings are available in diameters from 100 to 1000 mm.

Order example: BSL-SMO-300-45

Product code example:

Product code: **BSL-SMO - aaa - bbb**

type
diameter Ød$_1$
angle

Dimensions

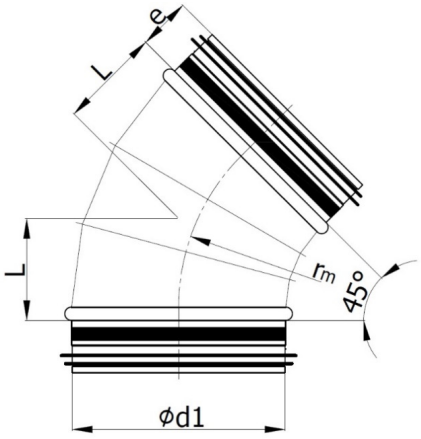

Diameter Ød$_1$ [mm]	L [mm]	Weight [kg]
100	41	0.39
125	52	0.53
140	56	0.62
150	62	0.68
160	66	0.75
180	75	0.89
200	83	1.05
224	93	1.25
250	104	1.48
280	116	1.77
300	124	2.03
315	130	2.20
355	145	2.67
400	162	3.25
450	186	4.27
500	204	5.09
560	232	6.25
600	249	7.04
630	261	7.63
710	294	10.14
800	331	15.95
900	373	19.54
1000	414	24.21

Smoke extraction segmented bend

BSL-SMO-45

Technical data

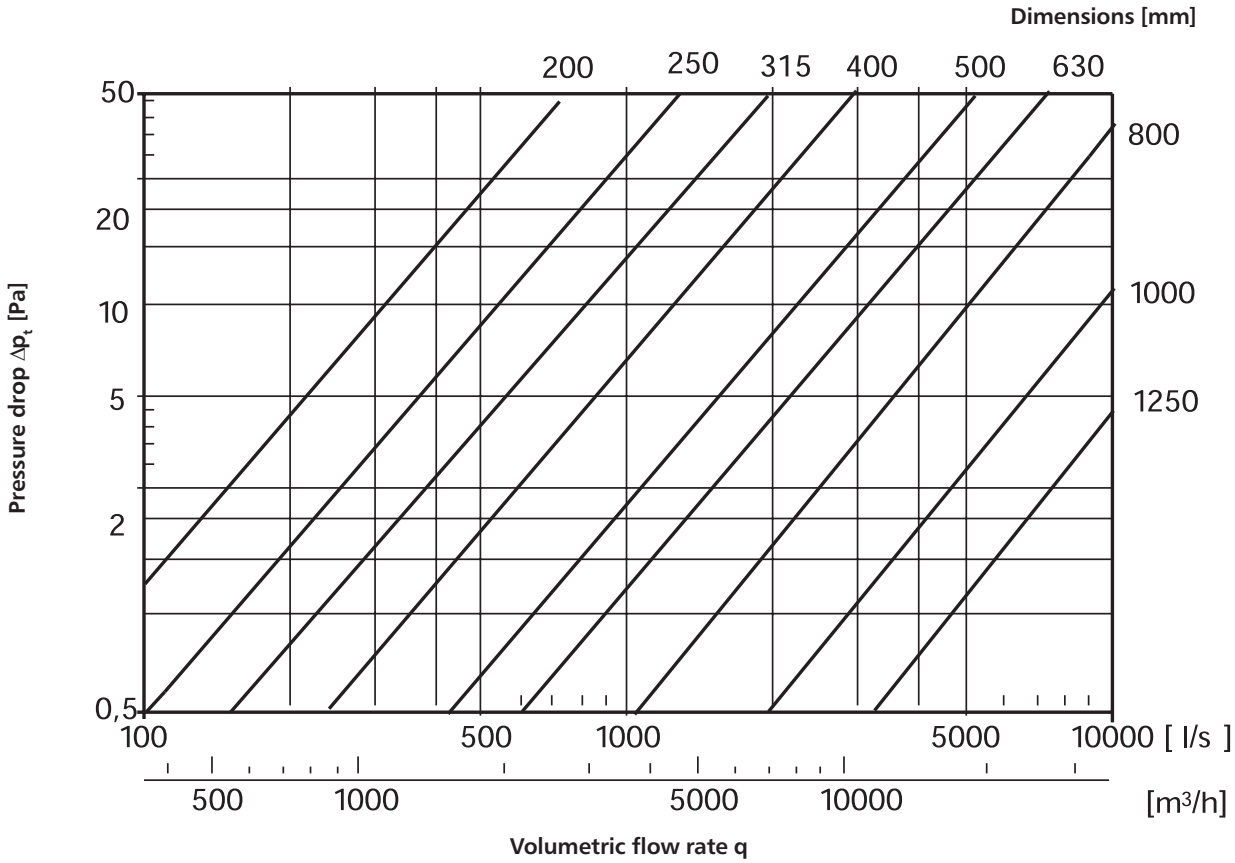

Long smoke extraction segmented bend

BSDL-SMO-90

Description

BSDL-SMO-90 long segmented male bend, fire resistance class: E_{600} 120 (h_o) S1500 single, designed for single-compartment smoke extraction systems and combined (dual-function) systems. The bend with a standard radius rm=d1 is equipped with GASK double lip seals for ventilation fittings made of EPDM and a 1.8 mm thick and 10 mm wide intumescent seal. Welding points and other joints are covered with high-temperature sealant. SMOKE System fittings are available in diameters from 100 to 1000 mm.

Example order: BSDL-SMO-250-90

Product code example:

Product code: **BSDL-SMO - aaa - bbb**

type
diameter Ød$_1$
angle

Dimensions

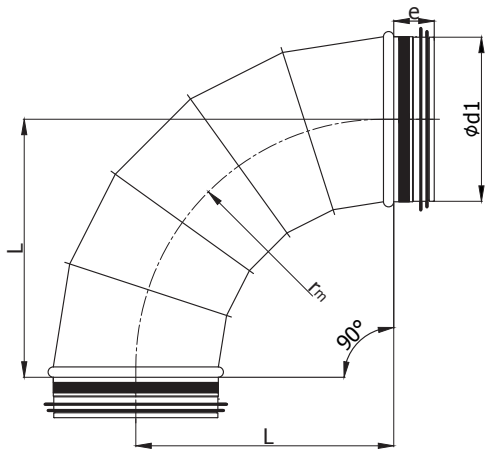

Diameter Ød$_1$ [mm]	L [mm]	Weight [kg]
100	150	0.693
125	187.5	0.10
140	210	1.20
150	225	1.35
160	240	1.50
180	270	1.84
200	300	2.21
224	336	2.70
250	375	3.27
280	420	4.01
300	450	4.63
315	472.5	5.06
355	532.5	6.28
400	600	7.81
450	675	10.01
500	750	12.14
560	840	15.29
600	900	17.42
630	945	19.01
710	1065	24.68
800	1200	39.54
900	1350	49.25
1000	1500	60.90

Long smoke extraction segmented bend

BSDL-SMO-90

Technical data

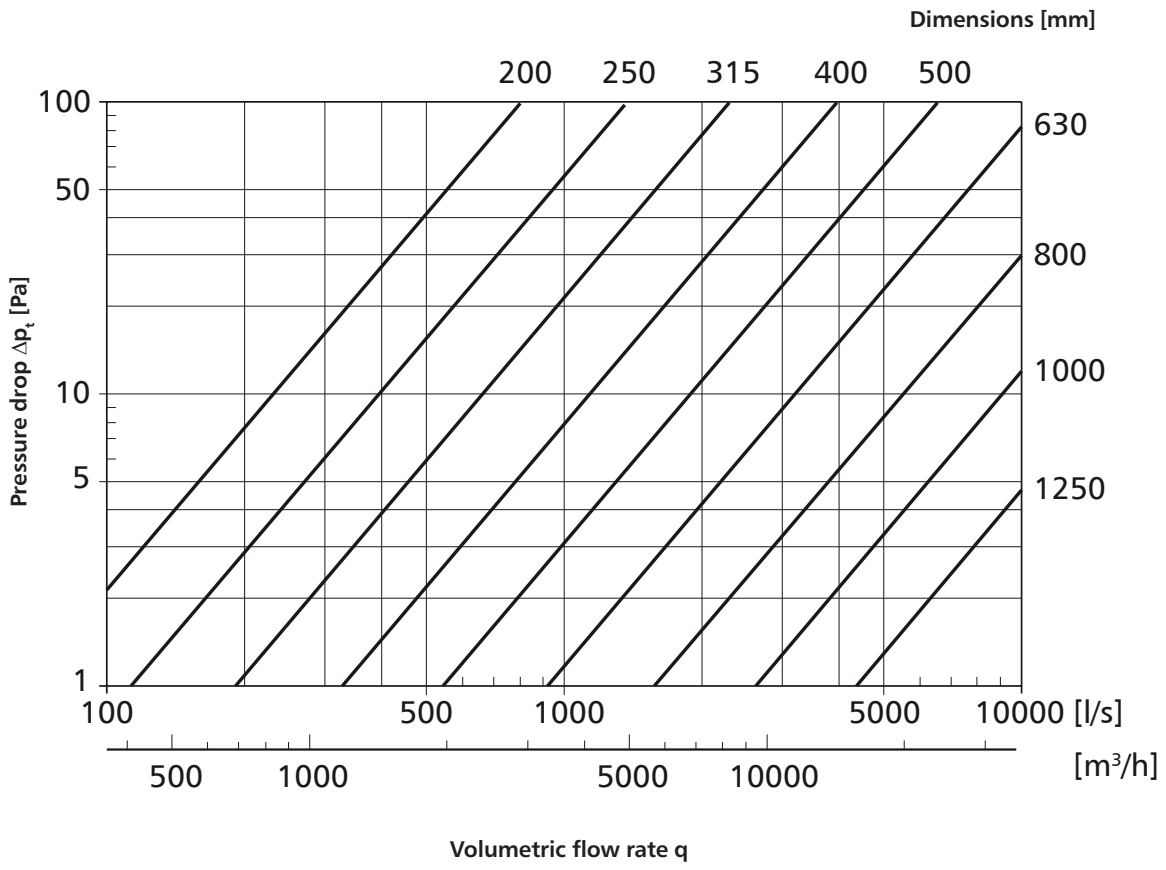

Smoke extraction reducer

RSCLL-SMO/RSCLFL-SMO/RSLL-SMO/RSLFL-SMO

Description

Segmented male reducers, fire resistance class: E_{600} 120 (h_o) S1500 single, designed for single-compartment smoke extraction systems and combined (dual-function) systems. All male reducers are equipped with GASK double lip seals for ventilation fittings made of EPDM and a 1.8 mm thick and 10 mm wide intumescent seal. Welding points and other joints are covered with high-temperature sealant. SMOKE System fittings are available in diameters from 100 to 1000 mm.

Available materials – product code example:

RSCLL-SMO – galvanized steel, symmetrical reducer, male ends
RSCLFL–SMO – galvanized steel, symmetrical reducer, male and female end
RSLL–SMO – galvanized steel, asymmetrical reducer, male ends
RSLFL–SMO – galvanized steel, asymmetrical reducer, male and female end

Order example: RSCLL-SMO-200-100

Product code example:

Kod produktu: **RSCLL-SMO - aaa - bbb**

type
diameter Ød$_1$
diameter Ød$_2$

Dimensions

RSCLL

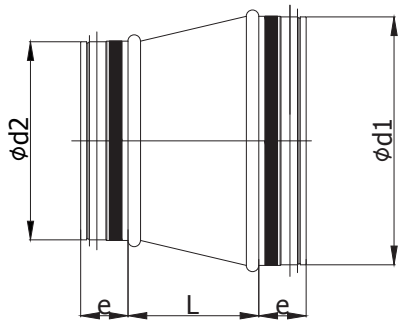

RSCLFL

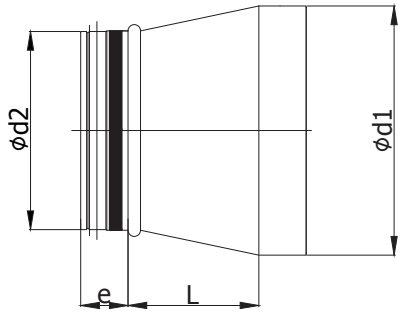

RSLL

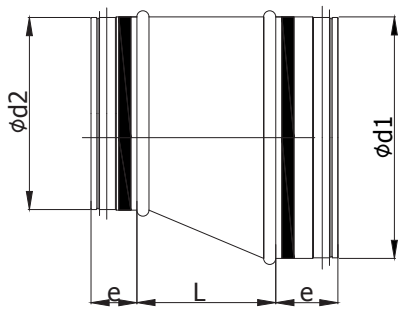

RSLFL

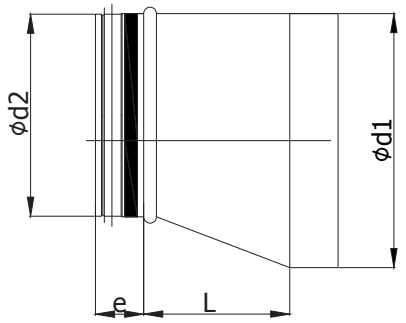

RSCLL-SMO/RSCLFL-SMO/RSLL-SMO/RSLFL-SMO

Dimensions

Ød$_1$ [mm]	Ød$_2$ [mm]	Sheet thickness t [mm]	L [mm]	Weight [kg]
125	100	0.7	52	0.39
140	100	0.7	69	0.45
	125	0.7	46	0.44
150	100	0.7	80	0.50
	125	0.7	51	0.47
	140	0.7	35	0.45
160	100	0.7	91	0.54
	125	0.7	63	0.52
	140	0.7	46	0.50
	150	0.7	35	0.49
180	100	0.7	113	0.64
	125	0.7	86	0.62
	140	0.7	69	0.60
	150	0.7	57	0.58
	160	0.7	47	0.57
200	100	0.7	135	0.75
	125	0.7	107	0.73
	140	0.7	90	0.71
	150	0.7	80	0.69
	160	0.7	69	0.68
	180	0.7	47	0.64
224	100	0.7	162	0.89
	125	0.7	134	0.87
	140	0.7	118	0.85
	150	0.7	106	0.83
	160	0.7	96	0.82
	180	0.7	73	0.78
	200	0.7	50	0.72
250	100	0.7	191	1.06
	125	0.7	163	1.04
	140	0.7	146	1.02
	150	0.7	135	1.00
	160	0.7	124	0.98
	180	0.7	102	0.94
	200	0.7	80	0.89
	224	0.7	53	0.82
280	125	0.7	196	1.25
	140	0.7	180	1.23
	150	0.7	169	1.21
	160	0.7	158	1.20
	180	0.7	135	1.15
	200	0.7	113	1.10
	224	0.7	87	1.03
	250	0.7	57	0.94

Ød$_1$ [mm]	Ød$_2$ [mm]	Sheet thickness t [mm]	L [mm]	Weight [kg]
300	100	0.7	245	1.44
	125	0.7	219	1.42
	140	0.7	203	1.41
	150	0.7	191	1.39
	160	0.7	180	1.37
	180	0.7	158	1.33
	200	0.7	135	1.27
	224	0.7	109	1.21
	250	0.7	80	1.12
	280	0.7	47	1.00
315	100	0.7	261	1.56
	125	0.7	235	1.54
	140	0.7	219	1.52
	150	0.7	208	1.51
	160	0.7	196	1.49
	180	0.7	175	1.45
	200	0.7	152	1.40
	224	0.7	125	1.32
	250	0.7	96	1.23
	280	0.7	63	1.11
	300	0.7	41	1.05
355	100	0.7	285	1.83
	125	0.7	280	1.89
	140	0.7	275	1.91
	150	0.7	268	1.92
	160	0.7	241	1.83
	180	0.7	219	1.79
	200	0.7	196	1.74
	224	0.7	170	1.67
	250	0.7	141	1.58
	280	0.7	108	1.46
	300	0.7	86	1.39
	315	0.7	69	1.32
400	100	0.7	345	2.28
	125	0.7	325	2.29
	140	0.7	310	2.28
	150	0.7	295	2.25
	160	0.7	295	2.28
	180	0.7	273	2.24
	200	0.7	226	2.07
	224	0.7	210	2.05
	250	0.7	175	1.92
	280	0.7	162	1.91
	300	0.7	139	1.83
	315	0.7	110	1.68
	355	0.7	71	1.50

Smoke extraction reducer

RSCLL-SMO/RSCLFL-SMO/RSLL-SMO/RSLFL-SMO

Ød$_1$ [mm]	Ød$_2$ [mm]	Sheet thickness t [mm]	L [mm]	Weight [kg]
450	100	0.7	355	2.76
	125	0.7	335	2.76
	140	0.7	320	2.74
	150	0.7	305	2.71
	160	0.7	291	2.67
	180	0.7	283	2.69
	200	0.7	276	2.71
	224	0.7	258	2.68
	250	0.7	226	2.57
	280	0.7	210	2.54
	300	0.7	194	2.51
	315	0.7	160	2.32
	355	0.7	121	2.14
	400	0.7	79	1.90
500	100	0.7	443	3.52
	125	0.7	419	3.51
	140	0.7	408	3.52
	150	0.7	391	3.47
	160	0.7	369	3.40
	180	0.7	366	3.45
	200	0.7	362	3.50
	224	0.7	335	3.43
	250	0.7	276	3.16
	280	0.7	264	3.16
	300	0.7	251	3.15
	315	0.7	211	2.93
	355	0.7	170	2.72
	400	0.7	129	2.48
	450	0.7	79	2.31
560	250	0.7	377	4.15
	280	0.7	340	4.01
	300	0.7	317	3.93
	315	0.7	300	3.86
	355	0.7	257	3.65
	400	0.7	211	3.40
	450	0.7	154	3.17
	500	0.7	98	2.80
600	250	0.7	447	4.89
	280	0.7	404	4.71
	300	0.7	382	4.65
	315	0.7	365	4.57
	355	0.7	321	4.37
	400	0.7	275	4.12
	450	0.7	219	3.92
	500	0.7	164	3.57
	560	0.7	96	3.03

Ød$_1$ [mm]	Ød$_2$ [mm]	Sheet thickness t [mm]	L [mm]	Weight [kg]
630	250	0.7	451	5.14
	280	0.7	418	5.02
	300	0.7	395	4.95
	315	0.7	379	4.88
	355	0.7	334	4.66
	400	0.7	288	4.39
	450	0.7	232	4.19
	500	0.7	177	3.82
	560	0.7	110	3.28
	600	0.7	73	2.97
710	250	0.7	485	6.42
	280	0.7	470	6.42
	300	0.7	455	6.41
	315	0.7	445	6.38
	355	0.7	428	6.39
	400	0.7	381	6.11
	450	0.7	325	5.87
	500	0.7	269	5.53
	560	0.7	202	4.97
	600	0.7	159	4.60
	630	0.7	125	4.32
800	250	0.9	505	9.46
	280	0.9	500	9.56
	300	0.9	495	9.64
	315	0.9	492	9.68
	355	0.9	469	9.62
	400	0.9	447	9.57
	450	0.9	426	9.72
	500	0.9	386	9.47
	560	0.9	304	8.56
	600	0.9	259	8.04
	630	0.9	226	7.69
	710	0.9	140	6.91
900	400	0.9	563	12.22
	450	0.9	536	12.33
	500	0.9	480	11.86
	560	0.9	414	11.17
	600	0.9	370	10.66
	630	0.9	337	10.33
	710	0.9	251	9.53
	800	0.9	151	8.01

Smoke extraction reducer

RSCLL-SMO/RSCLFL-SMO/RSLL-SMO/RSLFL-SMO

Ød$_1$ [mm]	Ød$_2$ [mm]	Sheet thickness t [mm]	L [mm]	Weight [kg]
1000	400	0.9	592	14.29
	450	0.9	592	14.77
	500	0.9	592	15.15
	560	0.9	525	14.44
	600	0.9	481	13.92
	630	0.9	447	13.46
	710	0.9	363	12.82
	800	0.9	263	11.27
	900	0.9	151	9.30

Technical data

Pressure loss charts

1st reduction degree

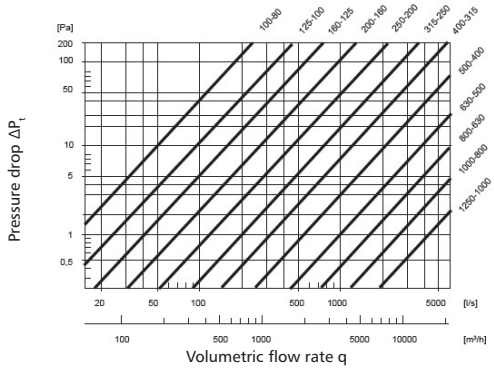

2nd reduction degree

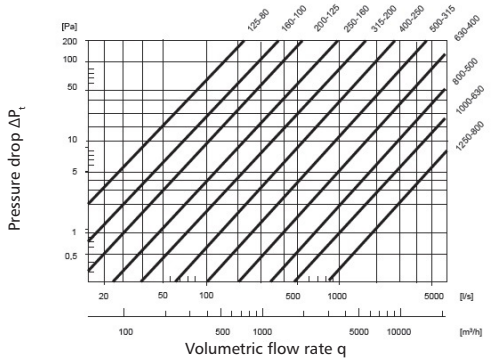

3rd reduction degree

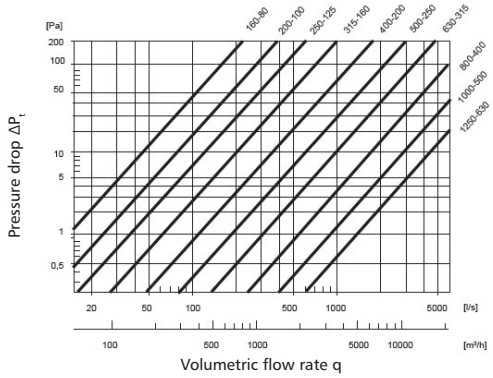

1st reduction degree

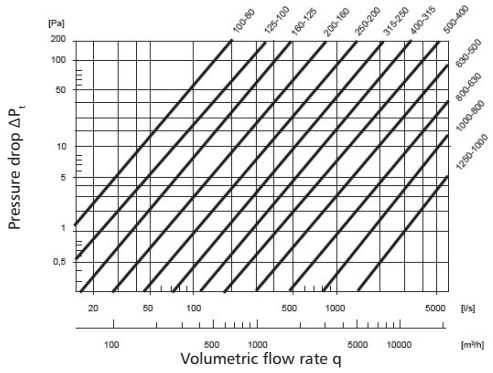

2nd reduction degree

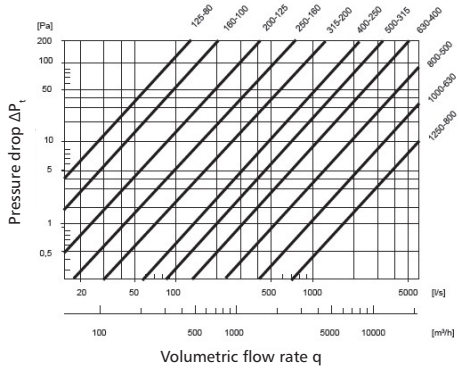

3rd reduction degree

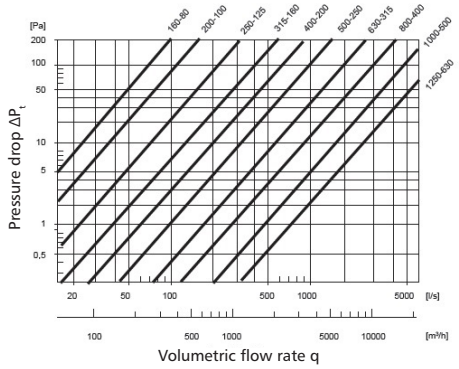

Segmented T-piece for smoke extraction systems

TSCL-SMO / TSL-SMO

Description

TSCL-SMO / TSL-SMO segmented T-pieces, fire resistance class: E_{600} 120 (h_o) S1500 single, designed for single-compartment smoke extraction systems and combined (dual-function) systems. They are available in a symmetrical and asymmetrical version, they are equipped with GASK double lip seals for ventilation fittings made of EPDM and a 1.8 mm thick and 10 mm wide intumescent seal. Welding points and other joints are covered with high-temperature sealant. SMOKE System fittings are available in diameters from 100 to 1000 mm.

Available versions:
TSCL-SMO T-piece made of SSCL-SMO segmented symmetrical full saddle for spiral ducts.
TSL-SMO T-piece made of SSL-SMO.segmented asymmetrical full saddle for spiral ducts.

Order example: TSCL-SMO-200-100

Product code example
Product code: **TSCL-SMO - aaa - bbb**

type
$Ød_1$
$Ød_3$

Dimensions

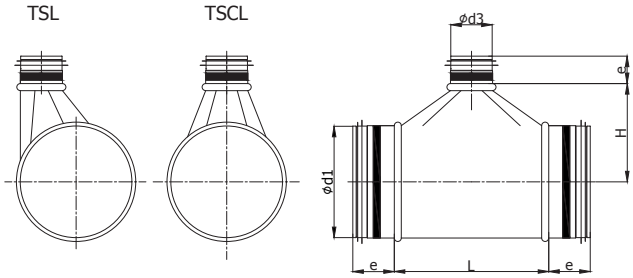

$Ød_{1\ nom}$ [mm]	$Ød_{3\ nom}$ [mm]	Sheet thickness t [mm]	L [mm]	H [mm]	Weight [kg]
100	100	0.7	190	95	0.85
	125	0.7	215	95	0.95
	140	0.7	240	100	1.04
	150	0.7	250	100	1.08
	160	0.7	260	100	1.12
125	100	0.7	190	110	1.03
	125	0.7	215	110	1.14
	140	0.7	240	115	1.24
	150	0.7	250	115	1.28
	160	0.7	260	115	1.32
	180	0.7	280	115	1.42
	200	0.7	330	130	1.64
140	100	0.7	190	115	1.11
	125	0.7	215	115	1.22
	140	0.7	240	120	1.33
	150	0.7	250	120	1.37
	160	0.7	260	120	1.41
	180	0.7	280	120	1.50
	200	0.7	330	135	1.74
	224	0.7	355	135	1.85
150	100	0.7	190	120	1.16
	125	0.7	215	120	1.28
	140	0.7	240	125	1.39
	150	0.7	250	125	1.43
	160	0.7	260	125	1.47
	180	0.7	280	125	1.57
	200	0.7	330	140	1.81
	224	0.7	355	140	1.93
	250	0.7	380	140	2.06

Segmented T-piece for smoke extraction systems

TSCL-SMO / TSL-SMO

Ød$_{1\ nom}$ [mm]	Ød$_{3\ nom}$ [mm]	Sheet thickness t [mm]	L [mm]	H [mm]	Weight [kg]
160	100	0.7	190	125	1.22
	125	0.7	215	125	1.34
	140	0.7	240	130	1.45
	150	0.7	250	130	1.49
	160	0.7	260	130	1.54
	180	0.7	280	130	1.64
	200	0.7	330	145	1.88
	224	0.7	355	145	2.01
	250	0.7	380	145	2.14
180	100	0.7	190	135	1.35
	125	0.7	215	135	1.48
	140	0.7	240	140	1.60
	150	0.7	250	140	1.64
	160	0.7	260	140	1.69
	180	0.7	280	140	1.79
	200	0.7	330	155	2.05
	224	0.7	355	155	2.18
	250	0.7	380	155	2.32
	280	0.7	430	165	2.62
200	100	0.7	190	145	1.48
	125	0.7	215	145	1.61
	140	0.7	240	150	1.74
	150	0.7	250	150	1.79
	160	0.7	260	150	1.84
	180	0.7	280	150	1.95
	200	0.7	330	165	2.22
	224	0.7	355	165	2.36
	250	0.7	380	165	2.50
	280	0.7	430	175	2.81
	300	0.7	450	175	2.94
	315	0.7	465	175	3.03
224	100	0.7	190	160	1.66
	125	0.7	215	160	1.80
	140	0.7	240	165	1.94
	150	0.7	250	165	1.99
	160	0.7	260	165	2.04
	180	0.7	280	165	2.16
	200	0.7	330	180	2.45
	224	0.7	355	180	2.59
	250	0.7	380	180	2.75
	280	0.7	430	190	3.08
	300	0.7	450	190	3.21
	315	0.7	465	190	3.31
	355	0.7	525	200	3.72

Ød$_{1\ nom}$ [mm]	Ød$_{3\ nom}$ [mm]	Sheet thickness t [mm]	L [mm]	H [mm]	Weight [kg]
250	100	0.7	190	170	1.78
	125	0.7	215	170	1.93
	140	0.7	240	175	2.08
	150	0.7	250	175	2.13
	160	0.7	260	175	2.19
	180	0.7	280	175	2.31
	200	0.7	330	190	2.62
	224	0.7	355	190	2.77
	250	0.7	380	190	2.93
	280	0.7	430	200	3.28
	300	0.7	450	200	3.41
	315	0.7	465	200	3.51
	355	0.7	525	210	3.94
	400	0.7	570	210	4.27
280	100	0.7	190	185	1.97
	125	0.7	215	185	2.13
	140	0.7	240	190	2.29
	150	0.7	250	190	2.35
	160	0.7	260	190	2.41
	180	0.7	280	190	2.54
	200	0.7	330	205	2.88
	224	0.7	355	205	3.03
	250	0.7	380	205	3.20
	280	0.7	430	215	3.57
	300	0.7	450	215	3.71
	315	0.7	465	215	3.82
	355	0.7	525	225	4.27
	400	0.7	570	225	4.61
	450	0.7	620	225	5.16
300	100	0.7	190	195	2.10
	125	0.7	215	195	2.27
	140	0.7	240	200	2.44
	150	0.7	250	200	2.50
	160	0.7	260	200	2.56
	180	0.7	280	200	2.70
	200	0.7	330	215	3.05
	224	0.7	355	215	3.21
	250	0.7	380	215	3.39
	280	0.7	430	225	3.77
	300	0.7	450	225	3.92
	315	0.7	465	225	4.03
	355	0.7	525	235	4.49
	400	0.7	570	235	4.84
	450	0.7	620	235	5.40

Segmented T-piece for smoke extraction systems

TSCL-SMO / TSL-SMO

Ød$_{1\ nom}$ [mm]	Ød$_{3\ nom}$ [mm]	Sheet thickness t [mm]	L [mm]	H [mm]	Waga [kg]
315	100	0.7	190	205	2.23
	125	0.7	215	205	2.41
	140	0.7	240	210	2.58
	150	0.7	250	210	2.64
	160	0.7	260	210	2.71
	180	0.7	280	210	2.85
	200	0.7	330	225	3.22
	224	0.7	355	225	3.38
	250	0.7	380	225	3.56
	280	0.7	430	235	3.96
	300	0.7	450	235	4.11
	315	0.7	465	235	4.22
	355	0.7	525	245	4.70
	400	0.7	570	245	5.06
	450	0.7	620	245	5.63
	500	0.7	680	250	6.16
355	100	0.7	190	225	2.48
	125	0.7	215	225	2.67
	140	0.7	240	230	2.86
	150	0.7	250	230	2.93
	160	0.7	260	230	3.00
	180	0.7	280	230	3.15
	200	0.7	330	245	3.55
	224	0.7	355	245	3.73
	250	0.7	380	245	3.93
	280	0.7	430	245	4.17
	300	0.7	450	255	4.51
	315	0.7	465	255	4.63
	355	0.7	525	265	5.15
	400	0.7	570	265	5.52
	450	0.7	620	265	6.11
	500	0.7	680	270	6.67
	560	0.7	740	270	7.24

Ød$_{1\ nom}$ [mm]	Ød$_{3\ nom}$ [mm]	Sheet thickness t [mm]	L [mm]	H [mm]	Weight [kg]
400	100	0.7	190	245	2.77
	125	0.7	215	245	2.98
	140	0.7	240	250	3.18
	150	0.7	250	250	3.26
	160	0.7	260	250	3.34
	180	0.7	280	250	3.50
	200	0.7	330	265	3.94
	224	0.7	355	265	4.13
	250	0.7	380	265	4.34
	280	0.7	430	275	4.80
	300	0.7	450	275	4.97
	315	0.7	465	275	5.10
	355	0.7	525	285	5.64
	400	0.7	570	285	6.04
	450	0.7	620	285	6.65
	500	0.7	680	290	7.24
	560	0.7	740	290	7.83
	600	0.7	780	290	8.24
	630	0.7	810	290	8.55
450	100	0.7	190	270	3.41
	125	0.7	215	270	3.65
	140	0.7	240	275	3.87
	150	0.7	250	275	3.96
	160	0.7	260	275	4.04
	180	0.7	280	275	4.23
	200	0.7	330	290	4.70
	224	0.7	355	290	4.91
	250	0.7	380	290	5.14
	280	0.7	430	300	5.63
	300	0.7	450	300	5.82
	315	0.7	465	300	5.95
	355	0.7	525	310	6.54
	400	0.7	570	310	6.97
	450	0.7	620	310	7.61
	500	0.7	680	315	8.23
	560	0.7	740	315	8.85
	600	0.7	780	315	9.28
	630	0.7	810	315	9.60
	710	0.7	890	315	10.86

Segmented T-piece for smoke extraction systems

TSCL-SMO / TSL-SMO

Ød$_{1\ nom}$ [mm]	Ød$_{3\ nom}$ [mm]	Sheet thickness t [mm]	L [mm]	H [mm]	Weight [kg]
500	100	0.7	190	300	3.76
	125	0.7	215	300	4.02
	140	0.7	240	305	4.26
	150	0.7	250	305	4.36
	160	0.7	260	305	4.45
	180	0.7	280	305	4.65
	200	0.7	330	320	5.16
	224	0.7	355	320	5.39
	250	0.7	380	320	5.64
	280	0.7	430	330	6.17
	300	0.7	450	330	6.37
	315	0.7	465	330	6.52
	355	0.7	525	340	7.15
	400	0.7	570	340	7.60
	450	0.7	620	340	7.66
	500	0.7	680	345	8.93
	560	0.7	740	345	9.59
	600	0.7	780	345	10.03
	630	0.7	810	345	10.37
	710	0.7	890	345	11.66
	800	0.9	980	345	15.97
560	200	0.7	330	345	5.72
	224	0.7	355	345	5.98
	250	0.7	380	345	6.25
	280	0.7	430	355	6.81
	300	0.7	450	355	7.03
	315	0.7	465	355	7.19
	355	0.7	525	365	7.87
	400	0.7	570	365	8.36
	450	0.7	620	365	9.09
	500	0.7	680	370	9.80
	560	0.7	740	370	10.49
	600	0.7	780	370	10.96
	630	0.7	810	370	11.32
	710	0.7	890	370	12.66
	800	0.9	980	370	17.25
	900	0.9	1080	370	19.19

Ød$_{1\ nom}$ [mm]	Ød$_{3\ nom}$ [mm]	Sheet thickness t [mm]	L [mm]	H [mm]	Weight [kg]
600	200	0.7	330	365	6.60
	224	0.7	355	365	6.88
	250	0.7	380	365	7.18
	280	0.7	430	375	7.53
	300	0.7	450	375	7.77
	315	0.7	465	375	7.94
	355	0.7	525	385	8.39
	400	0.7	570	385	8.91
	450	0.7	620	385	9.64
	500	0.7	680	390	10.38
	560	0.7	740	390	11.11
	600	0.7	780	390	12.79
	630	0.7	810	390	16.93
	710	0.7	890	390	19.14
	800	0.9	980	390	21.43
	900	0.9	1080	390	13.14
	1000	0.9	1180	390	13.97
630	200	0.7	330	380	6.39
	224	0.7	355	380	6.67
	250	0.7	380	380	6.97
	280	0.7	430	390	7.60
	300	0.7	450	390	7.84
	315	0.7	465	390	8.02
	355	0.7	525	400	8.77
	400	0.7	570	400	9.30
	450	0.7	620	400	10.06
	500	0.7	680	405	10.82
	560	0.7	740	405	10.35
	600	0.7	780	405	12.07
	630	0.7	810	405	12.45
	710	0.7	890	405	13.85
	800	0.9	980	405	18.79
	900	0.9	1080	405	20.83
	1000	0.9	1180	405	22.96

Segmented T-piece for smoke extraction systems

TSCL-SMO / TSL-SMO

Ød$_{1\ nom}$ [mm]	Ød$_{3\ nom}$ [mm]	Sheet thickness t [mm]	L [mm]	H [mm]	Weight [kg]
710	250	0.7	380	420	8.53
	280	0.7	430	420	8.93
	300	0.7	450	430	9.48
	315	0.7	465	430	9.68
	355	0.7	525	440	10.50
	400	0.7	570	440	11.09
	450	0.7	620	440	11.90
	500	0.7	680	445	12.73
	560	0.7	740	445	13.54
	600	0.7	780	445	14.08
	630	0.7	810	445	14.49
	710	0.7	890	445	15.96
	800	0.9	980	445	21.32
	900	0.9	1080	445	23.48
	1000	0.9	1180	445	25.72
800	250	0.9	380	465	12.18
	280	0.9	430	475	13.16
	300	0.9	450	475	13.53
	315	0.9	465	475	13.80
	355	0.9	525	485	14.95
	400	0.9	570	485	15.76
	450	0.9	620	485	16.83
	500	0.9	680	490	17.97
	560	0.9	740	490	19.07
	600	0.9	780	490	19.81
	630	0.9	810	490	20.37
	710	0.9	890	490	22.23
	800	0.9	980	490	24.48
	900	0.9	1080	490	26.78
	1000	0.9	1180	490	29.13
	710	0.7	890	405	13.85
	800	0.9	980	405	18.79
	900	0.9	1080	405	20.83
	1000	0.9	1180	405	22.96

Ød$_{1\ nom}$ [mm]	Ød$_{3\ nom}$ [mm]	Sheet thickness t [mm]	L [mm]	H [mm]	Weight [kg]
900	315	0.9	465	525	15.45
	355	0.9	525	535	16.73
	400	0.9	570	535	17.63
	450	0.9	620	535	18.79
	500	0.9	680	540	20.05
	560	0.9	740	540	21.26
	600	0.9	780	540	22.07
	630	0.9	810	540	22.67
	710	0.9	890	540	24.66
	800	0.9	980	540	27.06
	900	0.9	1080	540	29.53
	1000	0.9	1180	540	32.02
1000	315	0.9	465	575	17.57
	355	0.9	525	585	18.97
	400	0.9	570	585	19.97
	450	0.9	620	585	21.22
	500	0.9	680	590	22.60
	560	0.9	740	590	23.92
	600	0.9	780	590	24.80
	630	0.9	810	590	25.46
	710	0.9	890	590	27.59
	800	0.9	980	590	30.13
	900	0.9	1080	590	32.79
	1000	0.9	1180	590	35.40
	600	0.9	780	490	19.81
	630	0.9	810	490	20.37
	710	0.9	890	490	22.23
	800	0.9	980	490	24.48
	900	0.9	1080	490	26.78
	1000	0.9	1180	490	29.13

Pressed T-piece for smoke extraction systems

TPCL-SMO

Description

TPCL-SMO equal pressed T-piece, fire resistance class: E_{600} 120 (h_o) S1500 single, designed for single-compartment smoke extraction systems and combined (dual-function) systems. It is equipped with GASK double lip seals for ventilation fittings made of EPDM and a 1.8 mm thick and 10 mm wide intumescent seal. Welding points and other joints are covered with high-temperature sealant. SMOKE System fittings are available in diameters from 100 to 1000 mm.
TPCL-SMO equal pressed T-piece made of a SPSL-SMO short segmented saddle for ducts.

Order example: TPCL-SMO-200-100

Product code example

Product code: **TPCL-SMO - aaa - bbb**

type
$Ød_1$
$Ød_3$

Dimensions

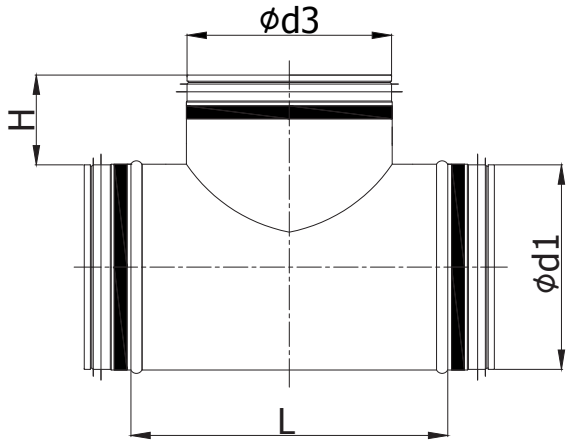

$Ød_{1\ nom}$ [mm]	$Ød_{3\ nom}$ [mm]	Sheet thickness t [mm]	L [mm]	H [mm]	Weight [kg]
100	100	0.7	150	80	0.61
125	100	0.7	150	80	0.72
	125	0.7	185	80	0.84
140	100	0.7	150	80	0.79
	125	0.7	185	80	0.87
	140	0.7	200	80	0.97
150	100	0.7	150	80	0.84
	125	0.7	185	80	0.96
	140	0.7	200	80	1.02
	150	0.7	210	80	1.06
160	100	0.7	150	80	0.89
	125	0.7	185	80	1.01
	140	0.7	200	80	1.07
	150	0.7	210	80	1.11
	160	0.7	220	80	1.14
180	100	0.7	160	80	1.01
	125	0.7	185	80	1.12
	140	0.7	200	80	1.18
	150	0.7	210	80	1.22
	160	0.7	220	80	1.26
	180	0.7	240	80	1.35
200	100	0.7	160	80	1.11
	125	0.7	185	80	1.22
	140	0.7	200	80	1.29
	150	0.7	210	80	1.33
	160	0.7	220	80	1.35
	180	0.7	240	80	1.47
	200	0.7	270	80	1.60

Pressed T-piece for smoke extraction systems

TPCL-SMO

Ød$_{1\ nom}$ [mm]	Ød$_{3\ nom}$ [mm]	Sheet thickness t [mm]	L [mm]	H [mm]	Weight [kg]
224	100	0.7	160	80	1.22
	125	0.7	185	80	1.35
	140	0.7	200	80	1.42
	150	0.7	210	80	1.47
	160	0.7	220	80	1.52
	180	0.7	240	80	1.61
	200	0.7	270	80	1.75
	224	0.7	290	80	1.86
250	100	0.7	160	80	1.35
	125	0.7	185	80	1.48
	140	0.7	200	80	1.56
	150	0.7	210	80	1.61
	160	0.7	220	80	1.66
	180	0.7	240	80	1.77
	200	0.7	270	80	1.91
	224	0.7	290	80	2.02
	250	0.7	320	80	2.18
280	100	0.7	160	80	1.49
	125	0.7	185	80	1.64
	140	0.7	200	80	1.72
	150	0.7	210	80	1.78
	160	0.7	220	80	1.84
	180	0.7	240	80	1.95
	200	0.7	270	80	2.11
	224	0.7	290	80	2.22
	250	0.7	320	80	2.39
	280	0.7	340	80	2.52
300	100	0.7	160	80	1.59
	125	0.7	185	80	1.72
	140	0.7	200	80	1.83
	150	0.7	210	80	1.89
	160	0.7	220	80	1.95
	180	0.7	240	80	2.07
	200	0.7	270	80	2.24
	224	0.7	290	80	2.36
	250	0.7	320	80	2.54
	280	0.7	340	80	2.66
	300	0.7	370	80	2.84

Ød$_{1\ nom}$ [mm]	Ød$_{3\ nom}$ [mm]	Sheet thickness t [mm]	L [mm]	H [mm]	Weight [kg]
315	100	0.7	160	80	1.66
	125	0.7	185	80	1.82
	140	0.7	200	80	1.92
	150	0.7	210	80	1.98
	160	0.7	220	80	2.04
	180	0.7	240	80	2.16
	200	0.7	270	80	2.34
	224	0.7	290	80	2.46
	250	0.7	320	80	2.64
	280	0.7	340	80	2.77
	300	0.7	370	80	2.95
	315	0.7	385	80	3.05
355	100	0.7	160	80	1.86
	125	0.7	185	80	2.03
	140	0.7	200	80	2.14
	150	0.7	210	80	2.21
	160	0.7	220	80	2.27
	180	0.7	240	80	2.41
	200	0.7	270	80	2.61
	224	0.7	290	80	2.74
	250	0.7	320	80	2.94
	280	0.7	340	80	3.08
	300	0.7	370	80	3.27
	315	0.7	385	80	3.37
	355	0.7	425	80	3.65
400	100	0.7	160	80	2.08
	125	0.7	185	80	2.27
	140	0.7	200	80	2.39
	150	0.7	210	80	2.46
	160	0.7	220	80	2.54
	180	0.7	240	80	2.69
	200	0.7	270	80	2.91
	224	0.7	290	80	3.05
	250	0.7	320	80	3.27
	280	0.7	340	80	3.42
	300	0.7	370	80	3.64
	315	0.7	385	80	3.75
	355	0.7	425	80	4.04
	400	0.7	480	80	4.45

Pressed T-piece for smoke extraction systems

TPCL-SMO

Ød$_{1\ nom}$ [mm]	Ød$_{3\ nom}$ [mm]	Sheet thickness t[mm]	L [mm]	H [mm]	Weight [kg]
450	100	0.7	160	80	2.63
	125	0.7	185	80	2.84
	140	0.7	200	80	2.97
	150	0.7	210	80	3.06
	160	0.7	220	80	3.14
	180	0.7	240	80	3.31
	200	0.7	270	80	3.55
	224	0.7	290	80	3.71
	250	0.7	320	80	3.95
	280	0.7	340	80	4.12
	300	0.7	370	80	4.35
	315	0.7	385	80	4.33
	355	0.7	425	80	4.79
	400	0.7	500	80	5.39
	450	0.7	530	80	5.62
500	100	0.7	160	80	2.91
	125	0.7	185	80	3.14
	140	0.7	200	80	3.28
	150	0.7	210	80	3.38
	160	0.7	220	80	3.47
	180	0.7	240	80	3.65
	200	0.7	270	80	3.92
	224	0.7	290	80	4.10
	250	0.7	320	80	4.36
	280	0.7	340	80	4.54
	300	0.7	370	80	4.80
	315	0.7	385	80	4.93
	355	0.7	425	80	5.28
	400	0.7	500	80	5.93
	450	0.7	530	80	6.19
	500	0.7	580	80	6.65
560	200	0.7	270	80	4.20
	224	0.7	290	80	4.56
	250	0.7	320	80	4.86
	280	0.7	340	80	5.05
	300	0.7	370	80	5.34
	315	0.7	385	80	5.49
	355	0.7	425	80	5.87
	400	0.7	500	80	6.41
	450	0.7	530	80	6.87
	500	0.7	580	80	7.35
	560	0.7	640	80	7.95

Ød$_{1\ nom}$ [mm]	Ød$_{3\ nom}$ [mm]	Sheet thickness t [mm]	L [mm]	H [mm]	Weight [kg]
600	200	0.7	270	80	4.57
	224	0.7	290	80	4.88
	250	0.7	320	80	5.20
	280	0.7	340	80	5.41
	300	0.7	370	80	5.72
	315	0.7	385	80	5.69
	355	0.7	425	80	6.09
	400	0.7	500	80	6.85
	450	0.7	530	80	7.14
	500	0.7	580	80	7.64
	560	0.7	640	80	8.25
	600	0.7	680	80	8.26
630	200	0.7	270	80	4.10
	224	0.7	290	80	5.11
	250	0.7	320	80	5.44
	280	0.7	340	80	5.65
	300	0.7	370	80	5.98
	315	0.7	385	80	6.14
	355	0.7	425	80	6.37
	400	0.7	500	80	7.39
	450	0.7	530	80	8.40
	500	0.7	580	80	8.20
	560	0.7	640	80	8.84
	600	0.7	680	80	9.27
	630	0.7	720	80	9.70
710	250	0.7	320	80	6.71
	280	0.7	350	80	7.07
	300	0.7	370	80	7.32
	315	0.7	385	80	7.50
	355	0.7	425	80	7.97
	400	0.7	470	80	8.50
	450	0.7	520	80	9.09
	500	0.7	570	80	9.70
	560	0.7	630	80	10.37
	600	0.7	670	80	10.84
	630	0.7	700	80	11.19
	710	0.7	800	110	12.73

Pressed T-piece for smoke extraction systems

TPCL-SMO

Ød$_{1\ nom}$ [mm]	Ød$_{3\ nom}$ [mm]	Sheet thickness t [mm]	L [mm]	H [mm]	Weight [kg]
800	250	0.9	320	80	9.68
	280	0.9	350	80	9.68
	300	0.9	370	80	10.56
	315	0.9	385	80	10.82
	355	0.9	425	80	11.51
	400	0.9	470	80	12.27
	450	0.9	520	80	13.11
	500	0.9	570	80	13.95
	560	0.9	630	80	14.94
	600	0.9	670	80	15.61
	630	0.9	700	80	16.10
	710	0.9	800	110	18.26
	800	0.9	900	110	20.03
900	315	0.9	385	80	12.14
	355	0.9	425	80	12.91
	400	0.9	470	80	13.77
	450	0.9	520	80	14.71
	500	0.9	570	80	15.65
	560	0.9	630	80	16.76
	600	0.9	670	80	17.49
	630	0.9	700	80	18.05
	710	0.9	800	110	20.39
	800	0.9	900	110	22.31
	900	0.9	1000	110	24.29
1000	315	0.9	385	80	14.12
	355	0.9	425	80	14.98
	400	0.9	470	80	15.93
	450	0.9	520	80	16.98
	500	0.9	570	80	18.02
	560	0.9	630	80	19.25
	600	0.9	670	80	20.06
	630	0.9	700	80	20.67
	710	0.9	800	110	23.20
	800	0.9	900	110	25.30
	900	0.9	1000	110	27.40
	1000	0.9	1100	130	30.01

Technical data

Pressure loss charts for T-pieces:

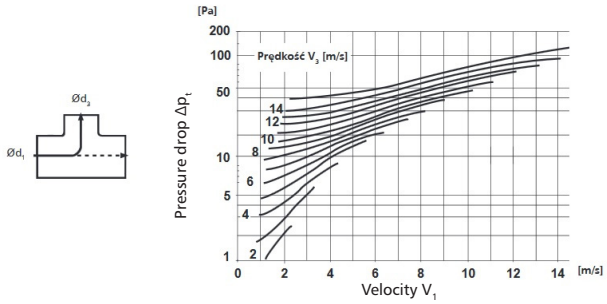

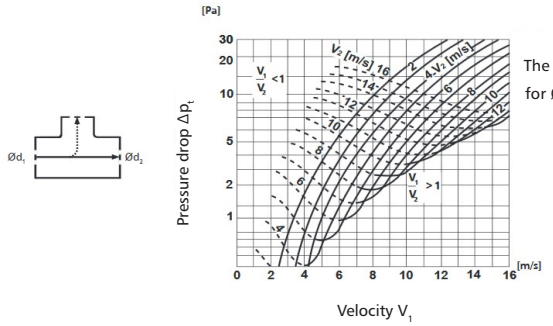

The chart is valid for Ød2 reducer.

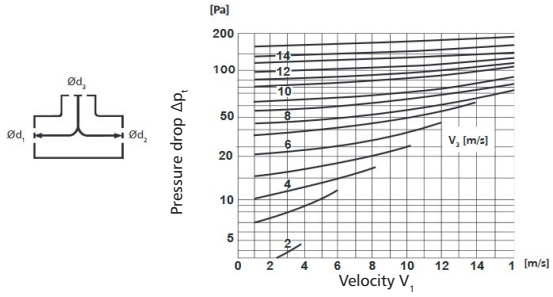

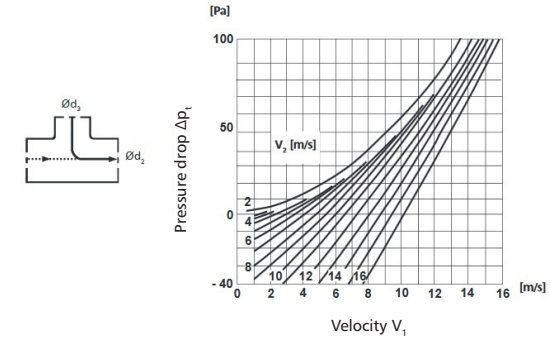

TPCL-SMO

Pressure loss charts for T-pieces:

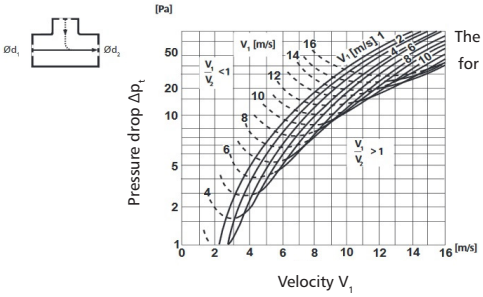

The chart is valid for Ød$_1$ reducer.

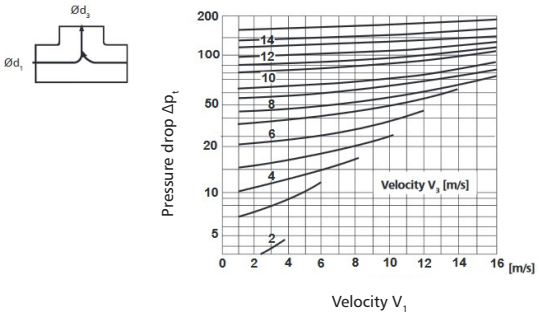

V_1 – average velocity in d_1
V_2 – average velocity in d_2
V_3 – average velocity in d_3

Y-piece for smoke extraction systems

YSVL-SMO

Description

YSVL-SMO symmetrical Y-piece, fire resistance class: E_{600} 120 (h_o) S1500 single, designed for single-compartment smoke extraction systems and combined (dual-function) systems. Its design enables even air distribution. It is equipped with GASK double lip seals for ventilation fittings made of EPDM and a 1.8 mm thick and 10 mm wide intumescent seal. Welding points and other joints are covered with high-temperature sealant. SMOKE System fittings are available in diameters from 100 to 1000 mm.

Order example: YSVL-SMO-600-400-400

Product code example

Product code: **YSVL-SMO - aaa - bbb - ccc**

type
$Ød_1$
$Ød_3$
$Ød_4$

Dimensions

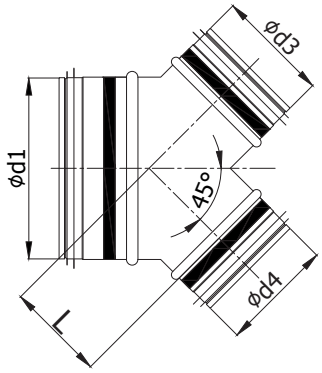

$Ød_{1\ nom}$ [mm]	$Ød_{3\ nom}$ [mm]	$Ød_{4\ nom}$ [mm]	Sheet thickness t [mm]	L [mm]	Weight [kg]
100	100	100	0.7	80	0.56
125	100	100	0.7	170	1.00
	125	125	0.7	90	0.73
140	100	100	0.7	185	1.08
	125	125	0.7	185	1.18
	140	140	0.7	100	0.84
150	100	100	0.7	190	1.17
	125	125	0.7	190	1.27
	140	140	0.7	190	1.33
	150	150	0.7	110	0.96
160	100	100	0.7	205	1.25
	125	125	0.7	205	1.38
	140	140	0.7	205	1.43
	150	150	0.7	205	1.46
	160	160	0.7	115	1.04
180	100	100	0.7	215	1.40
	125	125	0.7	215	1.52
	140	140	0.7	215	1.57
	150	150	0.7	215	1.61
	160	160	0.7	215	1.62
	180	180	0.7	125	1.21
200	100	100	0.7	230	1.57
	125	125	0.7	230	1.69
	140	140	0.7	230	1.75
	150	150	0.7	230	1.78
	160	160	0.7	230	1.81
	180	180	0.7	230	1.88
	200	200	0.7	135	1.39

Y-piece for smoke extraction systems

YSVL-SMO

Ød$_{1\ nom}$ [mm]	Ød$_{3\ nom}$ [mm]	Ød$_{4\ nom}$ [mm]	Sheet thickness t [mm]	L [mm]	Weight [kg]
224	100	100	0.7	250	1.76
	125	125	0.7	250	1.89
	140	140	0.7	250	1.95
	150	150	0.7	250	1.98
	160	160	0.7	250	2.01
	180	180	0.7	250	2.08
	200	200	0.7	250	2.14
	224	224	0.7	150	1.61
250	100	100	0.7	280	2.08
	125	125	0.7	280	2.22
	140	140	0.7	280	2.26
	150	150	0.7	280	2.30
	160	160	0.7	280	2.32
	180	180	0.7	280	2.44
	200	200	0.7	280	2.51
	224	224	0.7	280	2.57
	250	250	0.7	165	1.93
280	140	140	0.7	310	2.63
	150	150	0.7	310	2.67
	160	160	0.7	310	2.70
	180	180	0.7	310	2.79
	200	200	0.7	310	2.87
	224	224	0.7	310	2.95
	250	250	0.7	310	2.99
	280	280	0.7	180	2.25
300	150	150	0.7	320	2.87
	160	160	0.7	320	2.94
	180	180	0.7	320	3.02
	200	200	0.7	320	3.10
	224	224	0.7	320	3.19
	250	250	0.7	320	3.24
	280	280	0.7	320	3.33
	300	300	0.7	195	2.56
315	160	160	0.7	335	3.13
	180	180	0.7	335	3.23
	200	200	0.7	335	3.31
	224	224	0.7	335	3.40
	250	250	0.7	335	3.47
	280	280	0.7	335	3.56
	300	300	0.7	335	3.59
	315	315	0.7	207	2.82

Ød$_{1\ nom}$ [mm]	Ød$_{3\ nom}$ [mm]	Ød$_{4\ nom}$ [mm]	Sheet thickness t [mm]	L [mm]	Weight [kg]
355	180	180	0.7	365	3.73
	200	200	0.7	365	3.83
	224	224	0.7	365	3.92
	250	250	0.7	365	4.02
	280	280	0.7	365	4.14
	300	300	0.7	365	4.17
	315	315	0.7	365	4.19
	355	355	0.7	230	3.33
400	200	200	0.7	410	4.52
	224	224	0.7	410	4.62
	250	250	0.7	410	4.71
	280	280	0.7	410	4.82
	300	300	0.7	410	4.89
	315	315	0.7	410	4.47
	355	355	0.7	410	5.09
	400	400	0.7	260	4.15
450	224	224	0.7	440	5.56
	250	250	0.7	440	5.66
	280	280	0.7	440	5.82
	300	300	0.7	440	5.89
	315	315	0.7	440	5.94
	355	355	0.7	440	6.01
	400	400	0.7	440	6.07
	450	450	0.7	285	5.38
500	250	250	0.7	490	6.66
	280	280	0.7	490	6.83
	300	300	0.7	490	6.92
	315	315	0.7	490	6.99
	355	355	0.7	490	7.09
	400	400	0.7	490	7.20
	450	450	0.7	490	7.54
	500	500	0.7	310	6.24
560	280	280	0.7	550	8.14
	300	300	0.7	550	8.26
	315	315	0.7	550	8.34
	355	355	0.7	550	8.50
	400	400	0.7	550	8.64
	450	450	0.7	550	9.07
	500	500	0.7	550	9.10
	560	560	0.7	350	7.64

Y-piece for smoke extraction systems

YSVL-SMO

Ød$_{1\ nom}$ [mm]	Ød$_{3\ nom}$ [mm]	Ød$_{4\ nom}$ [mm]	Sheet thickness t [mm]	L [mm]	Weight [kg]
600	300	300	0.7	580	9.10
	315	315	0.7	580	9.20
	355	355	0.7	580	9.37
	400	400	0.7	580	9.51
	450	450	0.7	580	9.97
	500	500	0.7	580	10.03
	560	560	0.7	580	10.00
	600	600	0.7	380	8.76
630	315	315	0.7	610	9.93
	355	355	0.7	610	10.11
	400	400	0.7	610	10.37
	450	450	0.7	610	10.78
	500	500	0.7	610	10.88
	560	560	0.7	610	10.90
	630	630	0.7	395	9.40
710	355	355	0.7	670	12.36
	400	400	0.7	670	12.58
	450	450	0.7	670	13.12
	500	500	0.7	670	13.27
	560	560	0.7	670	13.35
	630	630	0.7	670	13.34
	710	710	0.7	445	12.49
800	400	400	0.9	740	20.80
	450	450	0.9	740	21.65
	500	500	0.9	740	22.08
	560	560	0.9	740	20.06
	630	630	0.9	740	22.86
	710	710	0.9	740	23.71
	800	800	0.9	500	19.62
900	450	450	0.9	825	23.69
	500	500	0.9	825	23.99
	560	560	0.9	825	24.28
	630	630	0.9	825	24.45
	710	710	0.9	825	25.17
	800	800	0.9	825	25.86
	900	900	0.9	650	29.30
1000	500	500	0.9	920	29.03
	560	560	0.9	920	29.44
	630	630	0.9	920	29.77
	710	710	0.9	920	30.74
	800	800	0.9	920	31.69
	900	900	0.9	920	31.38
	1000	1000	0.9	800	41.66

Collar saddle for smoke extraction systems

SSCL-SMO / SSL-SMO

Description

SSCL-SMO/SSL-SMO full segmented collar saddle, fire resistance class:E_{600} 120 (h_o) S1500 single, designed for single-compartment smoke extraction systems and combined (dual-function) systems. It is available in a symmetrical and asymmetrical version, it is equipped with GASK two double seals for ventilation fittings made of EPDM and a 1.8 mm thick and 10 mm wide intumescent seal. Welding points and other joints are covered with high-temperature sealant, which use is required during assembly in a duct. SMOKE System fittings are available in diameters from 100 to 1000 mm.

Available versions:

SSCL-SMO-…-100
symmetrical saddle, galvanized steel

SSL-SMO-…-100
asymmetrical saddle, galvanized steel

Order example: SSCL-SMO-200-100

Product code example

Product code: **SSCL-SMO - aaa - bbb**

type
$Ød_1$
$Ød_3$

Dimensions

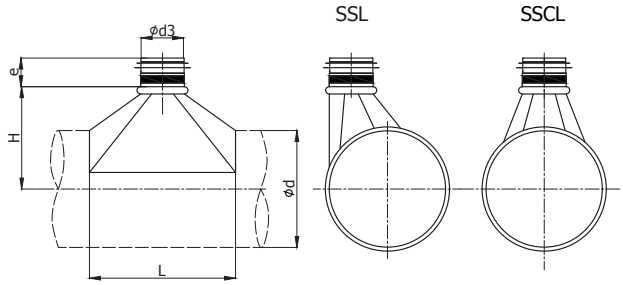

$Ød_{1\ nom}$ [mm]	$Ød_{3\ nom}$ [mm]	Sheet thickness t [mm]	L [mm]	H [mm]	Weight [kg]
100	100	0.7	190	95	0.45
	125	0.7	215	95	0.55
	140	0.7	240	100	0.63
	150	0.7	250	100	0.67
	160	0.7	260	100	0.71
125	100	0.7	190	110	0.48
	125	0.7	215	110	0.59
	140	0.7	240	115	0.68
	150	0.7	250	115	0.72
	160	0.7	260	115	0.76
	180	0.7	280	115	0.85
	200	0.7	330	130	1.04
140	100	0.7	190	115	0.48
	125	0.7	215	115	0.59
	140	0.7	240	120	0.68
	150	0.7	250	120	0.72
	160	0.7	260	120	0.76
	180	0.7	280	120	0.85
	200	0.7	330	135	1.05
	224	0.7	355	135	1.17
150	100	0.7	190	120	0.49
	125	0.7	215	120	0.60
	140	0.7	240	125	0.69
	150	0.7	250	125	0.73
	160	0.7	260	125	0.77
	180	0.7	280	125	0.86
	200	0.7	330	140	1.07
160	100	0.7	190	125	0.50
	125	0.7	215	125	0.60
	140	0.7	240	130	0.70
	150	0.7	250	130	0.74
	160	0.7	260	130	0.78
	180	0.7	280	130	0.88
	200	0.7	330	145	1.08
	224	0.7	355	145	1.20
	250	0.7	380	145	1.34

Collar saddle for smoke extraction systems

SSCL-SMO / SSL-SMO

Ød$_{1\ nom}$ [mm]	Ød$_{3\ nom}$ [mm]	Sheet thickness t [mm]	L [mm]	H [mm]	Weight [kg]
180	100	0.7	190	135	0.51
	125	0.7	215	135	0.62
	140	0.7	240	140	0.72
	150	0.7	250	140	0.76
	160	0.7	260	140	0.80
	180	0.7	280	140	0.90
	200	0.7	330	155	1.11
	224	0.7	355	155	1.24
	250	0.7	380	155	1.37
	280	0.7	430	165	1.64
200	100	0.7	190	145	0.52
	125	0.7	215	145	0.64
	140	0.7	240	150	0.74
	150	0.7	250	150	0.78
	160	0.7	260	150	0.82
	180	0.7	280	150	0.92
	200	0.7	330	165	1.14
	224	0.7	355	165	1.27
	250	0.7	380	165	1.40
	280	0.7	430	175	1.68
	300	0.7	450	175	1.81
	315	0.7	465	175	1.90
224	100	0.7	190	160	0.56
	125	0.7	215	160	0.67
	140	0.7	240	165	0.78
	150	0.7	250	165	0.82
	160	0.7	260	165	0.87
	180	0.7	280	165	0.97
	200	0.7	330	180	1.20
	224	0.7	355	180	1.33
	250	0.7	380	180	1.47
	280	0.7	430	190	1.76
	300	0.7	450	190	1.89
	315	0.7	465	190	1.98
	355	0.7	525	200	2.35

Ød$_{1\ nom}$ [mm]	Ød$_{3\ nom}$ [mm]	Sheet thickness t [mm]	L [mm]	H [mm]	Weight [kg]
250	100	0.7	190	170	0.55
	125	0.7	215	170	0.67
	140	0.7	240	175	0.78
	150	0.7	250	175	0.82
	160	0.7	260	175	0.86
	180	0.7	280	175	0.97
	200	0.7	330	190	1.20
	224	0.7	355	190	1.33
	250	0.7	380	190	1.48
	280	0.7	430	200	1.72
	300	0.7	450	200	1.90
	315	0.7	465	200	1.95
	355	0.7	525	210	2.38
	400	0.7	570	210	2.64
280	100	0.7	190	185	0.57
	125	0.7	215	185	0.69
	140	0.7	240	190	0.80
	150	0.7	250	190	0.84
	160	0.7	260	190	0.89
	180	0.7	280	190	0.99
	200	0.7	330	205	1.24
	224	0.7	355	205	1.37
	250	0.7	380	205	1.52
	280	0.7	430	215	1.77
	300	0.7	450	215	1.95
	315	0.7	465	215	2.00
	355	0.7	525	225	2.44
	400	0.7	570	225	2.71
	450	0.7	620	225	3.25
300	100	0.7	190	195	0.58
	125	0.7	215	195	0.70
	140	0.7	240	200	0.81
	150	0.7	250	200	0.86
	160	0.7	260	200	0.90
	180	0.7	280	200	1.01
	200	0.7	330	215	1.26
	224	0.7	355	215	1.39
	250	0.7	380	215	1.54
	280	0.7	430	225	1.80
	300	0.7	450	225	1.98
	315	0.7	465	225	2.03
	355	0.7	525	235	2.48
	400	0.7	570	235	2.75
	450	0.7	620	235	3.29

Collar saddle for smoke extraction systems

SSCL-SMO / SSL-SMO

Ød$_{1\ nom}$ [mm]	Ød$_{3\ nom}$ [mm]	Sheet thickness t [mm]	L [mm]	H [mm]	Weight [kg]
315	100	0.7	190	205	0.61
	125	0.7	215	205	0.73
	140	0.7	240	210	0.84
	150	0.7	250	210	0.89
	160	0.7	260	210	0.94
	180	0.7	280	210	1.04
	200	0.7	330	225	1.30
	224	0.7	355	225	1.44
	250	0.7	380	225	1.59
	280	0.7	430	235	1.85
	300	0.7	450	235	2.04
	315	0.7	465	235	2.14
	355	0.7	525	245	2.54
	400	0.7	570	245	2.86
	450	0.7	620	245	3.36
	500	0.7	680	250	3.86
355	100	0.7	190	225	0.63
	125	0.7	215	225	0.75
	140	0.7	240	230	0.87
	150	0.7	250	230	0.92
	160	0.7	260	230	0.96
	180	0.7	280	230	1.07
	200	0.7	330	245	1.34
	224	0.7	355	245	1.48
	250	0.7	380	245	1.63
	280	0.7	430	245	1.83
	300	0.7	450	255	2.10
	315	0.7	465	255	2.15
	355	0.7	525	265	2.62
	400	0.7	570	265	2.96
	450	0.7	620	265	3.45
	500	0.7	680	270	3.96
	560	0.7	740	270	4.50

Ød$_{1\ nom}$ [mm]	Ød$_{3\ nom}$ [mm]	Sheet thickness t [mm]	L [mm]	H [mm]	Weight [kg]
400	100	0.7	190	245	0.63
	125	0.7	215	245	0.75
	140	0.7	240	250	0.87
	150	0.7	250	250	0.92
	160	0.7	260	250	0.97
	180	0.7	280	250	1.08
	200	0.7	330	265	1.35
	224	0.7	355	265	1.50
	250	0.7	380	265	1.65
	280	0.7	430	275	1.99
	300	0.7	450	275	2.13
	315	0.7	465	275	2.24
	355	0.7	525	285	2.66
	400	0.7	570	285	3.01
	450	0.7	620	285	3.58
	500	0.7	680	290	4.10
	560	0.7	740	290	4.66
	600	0.7	780	290	5.05
	630	0.7	810	290	5.36
450	100	0.7	190	270	0.65
	125	0.7	215	270	0.78
	140	0.7	240	275	0.90
	150	0.7	250	275	0.95
	160	0.7	260	275	1.00
	180	0.7	280	275	1.11
	200	0.7	330	290	1.40
	224	0.7	355	290	1.54
	250	0.7	380	290	1.70
	280	0.7	430	300	2.04
	300	0.7	450	300	2.19
	315	0.7	465	300	2.29
	355	0.7	525	310	2.74
	400	0.7	570	310	3.09
	450	0.7	620	310	3.67
	500	0.7	680	315	4.21
	560	0.7	740	315	4.78
	600	0.7	780	315	5.18
	630	0.7	810	315	5.49
	710	0.7	890	315	6.73

Collar saddle for smoke extraction systems

SSCL-SMO / SSL-SMO

Ød$_{1\ nom}$ [mm]	Ød$_{3\ nom}$ [mm]	Sheet thickness t [mm]	L [mm]	H [mm]	Weight [kg]
500	100	0.7	190	300	0.56
	125	0.7	215	300	0.80
	140	0.7	240	305	0.93
	150	0.7	250	305	0.97
	160	0.7	260	305	1.02
	180	0.7	280	305	1.14
	200	0.7	330	320	1.44
	224	0.7	355	320	1.58
	250	0.7	380	320	1.74
	280	0.7	430	330	2.10
	300	0.7	450	330	2.24
	315	0.7	465	330	2.35
	355	0.7	525	340	2.81
	400	0.7	570	340	3.17
	450	0.7	620	340	3.76
	500	0.7	680	345	4.31
	560	0.7	740	345	4.94
	600	0.7	780	345	5.30
	630	0.7	810	345	5.62
	710	0.7	890	345	6.87
	800	0.9	980	345	10.26
560	200	0.7	330	345	1.48
	224	0.7	355	345	1.63
	250	0.7	380	345	1.78
	280	0.7	430	355	2.16
	300	0.7	450	355	2.31
	315	0.7	465	355	2.42
	355	0.7	525	365	2.89
	400	0.7	570	365	3.26
	450	0.7	620	365	3.77
	500	0.7	680	370	4.32
	560	0.7	740	370	4.95
	600	0.7	780	370	5.43
	630	0.7	810	370	5.75
	710	0.7	890	370	7.03
	800	0.9	980	370	10.47
	900	0.9	1080	370	12.17

Ød$_{1\ nom}$ [mm]	Ød$_{3\ nom}$ [mm]	Sheet thickness t [mm]	L [mm]	H [mm]	Weight [kg]
600	200	0.7	330	365	1.51
	224	0.7	355	365	1.56
	250	0.7	380	365	1.83
	280	0.7	430	375	2.20
	300	0.7	450	375	2.35
	315	0.7	465	375	2.46
	355	0.7	525	385	2.94
	400	0.7	570	385	3.31
	450	0.7	620	385	3.88
	500	0.7	680	390	4.49
	560	0.7	740	390	5.09
	600	0.7	780	390	5.79
	630	0.7	810	390	5.84
	710	0.7	890	390	7.11
	800	0.9	980	390	10.59
	900	0.9	1080	390	12.31
	1000	0.9	1180	390	14.37
630	200	0.7	330	380	1.53
	224	0.7	355	380	1.68
	250	0.7	380	380	1.85
	280	0.7	430	390	2.23
	300	0.7	450	390	2.38
	315	0.7	465	390	2.49
	355	0.7	525	400	2.98
	400	0.7	570	400	3.35
	450	0.7	620	400	3.96
	500	0.7	680	405	4.54
	560	0.7	740	405	5.15
	600	0.7	780	405	5.57
	630	0.7	810	405	5.90
	710	0.7	890	405	7.18
	800	0.9	980	405	10.69
	900	0.9	1080	405	12.43
	1000	0.9	1180	405	14.50

Collar saddle for smoke extraction systems

SSCL-SMO / SSL-SMO

Ød$_{1\ nom}$ [mm]	Ød$_{3\ nom}$ [mm]	Sheet thickness t [mm]	L [mm]	H [mm]	Weight [kg]
710	250	0.7	380	420	1.91
	280	0.7	430	420	2.13
	300	0.7	450	430	2.45
	315	0.7	465	430	2.57
	355	0.7	525	440	3.07
	400	0.7	570	440	3.45
	450	0.7	620	440	4.07
	500	0.7	680	445	4.66
	560	0.7	740	445	5.28
	600	0.7	780	445	5.72
	630	0.7	810	445	6.05
	710	0.7	890	445	7.35
	800	0.9	980	445	10.95
	900	0.9	1080	445	12.74
	1000	0.9	1180	445	14.83
800	250	0.9	380	465	2.44
	280	0.9	430	475	2.72
	300	0.9	450	475	3.14
	315	0.9	465	475	3.28
	355	0.9	525	485	3.93
	400	0.9	570	485	4.42
	450	0.9	620	485	5.16
	500	0.9	680	490	5.92
	560	0.9	740	490	6.71
	600	0.9	780	490	7.26
	630	0.9	810	490	7.68
	710	0.9	890	490	9.24
	800	0.9	980	490	11.21
	900	0.9	1080	490	13.04
	1000	0.9	1180	490	15.17
900	315	0.9	465	525	3.39
	355	0.9	525	535	4.06
	400	0.9	570	535	4.56
	450	0.9	620	535	5.31
	500	0.9	680	540	6.09
	560	0.9	740	540	6.89
	600	0.9	780	540	7.46
	630	0.9	810	540	7.89
	710	0.9	890	540	9.47
	800	0.9	980	540	11.46
	900	0.9	1080	540	13.31
	1000	0.9	1180	540	15.51

Ød$_{1\ nom}$ [mm]	Ød$_{3\ nom}$ [mm]	Sheet thickness t [mm]	L [mm]	H [mm]	Weight [kg]
1000	315	0.9	465	575	3.49
	355	0.9	525	585	4.18
	400	0.9	570	585	4.69
	450	0.9	620	585	5.44
	500	0.9	680	590	6.24
	560	0.9	740	590	7.06
	600	0.9	780	590	7.63
	630	0.9	810	590	8.07
	710	0.9	890	590	9.69
	800	0.9	980	590	11.72
	900	0.9	1080	590	13.58
	1000	0.9	1180	590	15.81

Collar saddle for smoke extraction systems

SPSL-SMO

Description

SPSL-SMO segmented short collar saddle, fire resistance class:E_{600} 120 (h_o) S1500 single, designed for single-compartment smoke extraction systems and combined (dual-function) systems. It is used as a multi-purpose piece for construction of T-pieces or branches, it is equipped with GASK double lip seals for ventilation fittings made of EPDM and a 1.8 mm thick and 10 mm wide intumescent seal. Welding points and other joints are covered with high-temperature sealant, which use is required during assembly on a duct. SMOKE System fittings are available in diameters from 100 to 1000 mm.

Order example: SPSL-SMO-200-100

Product code example

Product code: **SPSL-SMO - aaa - bbb**

type
Ød
$Ød_3$

Dimensions

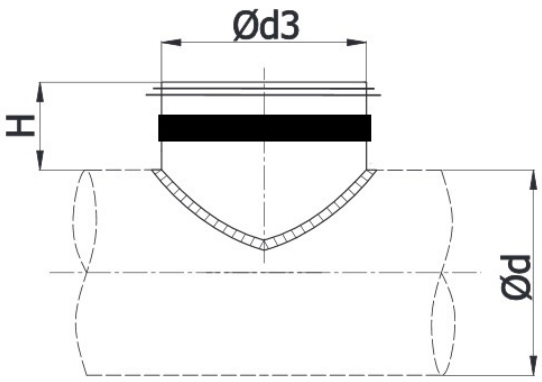

$Ød_{nom}$ [mm]	*$Ød_{3\ nom}$ [mm]*	*Sheet thickness t [mm]*	*H [mm]*	*Weight [kg]*
100	100	0.7	80	0.20
125	100	0.7	80	0.18
	125	0.7	80	0.26
140	100	0.7	80	0.18
	125	0.7	80	0.24
	140	0.7	80	0.30
150	100	0.7	80	0.18
	125	0.7	80	0.24
	140	0.7	80	0.28
	150	0.7	80	0.32
160	100	0.7	80	0.18
	125	0.7	80	0.24
	140	0.7	80	0.28
	150	0.7	80	0.31
	160	0.7	80	0.35
180	100	0.7	80	0.18
	125	0.7	80	0.23
	140	0.7	80	0.27
	150	0.7	80	0.30
	160	0.7	80	0.33
	180	0.7	80	0.40
200	100	0.7	80	0.18
	125	0.7	80	0.23
	140	0.7	80	0.26
	150	0.7	80	0.29
	160	0.7	80	0.32
	180	0.7	80	0.38
	200	0.7	80	0.46

Collar saddle for smoke extraction systems

SPSL-SMO

$Ød_{nom}$ [mm]	$Ød_{3\ nom}$ [mm]	Sheet thickness t [mm]	H [mm]	Weight [kg]
224	100	0.7	80	0.17
	125	0.7	80	0.23
	140	0.7	80	0.26
	150	0.7	80	0.28
	160	0.7	80	0.31
	180	0.7	80	0.36
	200	0.7	80	0.43
	224	0.7	80	0.53
250	100	0.7	80	0.17
	125	0.7	80	0.22
	140	0.7	80	0.26
	150	0.7	80	0.28
	160	0.7	80	0.30
	180	0.7	80	0.35
	200	0.7	80	0.41
	224	0.7	80	0.49
	250	0.7	80	0.61
280	100	0.7	80	0.17
	125	0.7	80	0.22
	140	0.7	80	0.25
	150	0.7	80	0.28
	160	0.7	80	0.30
	180	0.7	80	0.35
	200	0.7	80	0.40
	224	0.7	80	0.47
	250	0.7	80	0.56
	280	0.7	80	0.71
300	100	0.7	80	0.17
	125	0.7	80	0.22
	140	0.7	80	0.25
	150	0.7	80	0.27
	160	0.7	80	0.30
	180	0.7	80	0.34
	200	0.7	80	0.39
	224	0.7	80	0.46
	250	0.7	80	0.55
	280	0.7	80	0.67
	300	0.7	80	0.78

$Ød_{nom}$ [mm]	$Ød_{3\ nom}$ [mm]	Sheet thickness t [mm]	H [mm]	Weight [kg]
315	100	0.7	80	0.17
	125	0.7	80	0.22
	140	0.7	80	0.25
	150	0.7	80	0.27
	160	0.7	80	0.29
	180	0.7	80	0.34
	200	0.7	80	0.39
	224	0.7	80	0.46
	250	0.7	80	0.54
	280	0.7	80	0.65
	300	0.7	80	0.74
	315	0.7	80	0.84
355	100	0.7	80	0.17
	125	0.7	80	0.22
	140	0.7	80	0.25
	150	0.7	80	0.27
	160	0.7	80	0.29
	180	0.7	80	0.33
	200	0.7	80	0.38
	224	0.7	80	0.45
	250	0.7	80	0.52
	280	0.7	80	0.62
	300	0.7	80	0.69
	315	0.7	80	0.76
	355	0.7	80	0.99
400	100	0.7	80	0.17
	125	0.7	80	0.22
	140	0.7	80	0.25
	150	0.7	80	0.27
	160	0.7	80	0.29
	180	0.7	80	0.33
	200	0.7	80	0.38
	224	0.7	80	0.44
	250	0.7	80	0.50
	280	0.7	80	0.60
	300	0.7	80	0.66
	315	0.7	80	0.72
	355	0.7	80	0.89
	400	0.7	80	1.17

Collar saddle for smoke extraction systems

SPSL-SMO

Ød$_{nom}$ [mm]	Ød$_{3\ nom}$ [mm]	Sheet thickness t [mm]	H [mm]	Weight [kg]
450	100	0.7	80	0.17
	125	0.7	80	0.22
	140	0.7	80	0.24
	150	0.7	80	0.26
	160	0.7	80	0.28
	180	0.7	80	0.33
	200	0.7	80	0.37
	224	0.7	80	0.43
	250	0.7	80	0.49
	280	0.7	80	0.58
	300	0.7	80	0.64
	315	0.7	80	0.69
	355	0.7	80	0.84
	400	0.7	80	1.04
	450	0.7	80	1.39
500	100	0.7	80	0.17
	125	0.7	80	0.22
	140	0.7	80	0.24
	150	0.7	80	0.26
	160	0.7	80	0.28
	180	0.7	80	0.32
	200	0.7	80	0.38
	224	0.7	80	0.42
	250	0.7	80	0.48
	280	0.7	80	0.56
	300	0.7	80	0.62
	315	0.7	80	0.67
	355	0.7	80	0.80
	400	0.7	80	0.98
	450	0.7	80	1.24
	500	0.7	80	1.62
560	200	0.7	80	0.36
	224	0.7	80	0.42
	250	0.7	80	0.48
	280	0.7	80	0.55
	300	0.7	80	0.61
	315	0.7	80	0.65
	355	0.7	80	0.77
	400	0.7	80	0.94
	450	0.7	80	1.16
	500	0.7	80	1.43
	560	0.7	80	1.92

Ød$_{nom}$ [mm]	Ød$_{3\ nom}$ [mm]	Sheet thickness t [mm]	H [mm]	Weight [kg]
600	200	0.7	80	0.36
	224	0.7	80	0.41
	250	0.7	80	0.47
	280	0.7	80	0.55
	300	0.7	80	0.60
	315	0.7	80	0.64
	355	0.7	80	0.76
	400	0.7	80	0.91
	450	0.7	80	1.12
	500	0.7	80	1.36
	560	0.7	80	1.74
	600	0.7	80	2.14
630	200	0.7	80	0.36
	224	0.7	80	0.41
	250	0.7	80	0.47
	280	0.7	80	0.54
	300	0.7	80	0.59
	315	0.7	80	0.63
	355	0.7	80	0.75
	400	0.7	80	0.90
	450	0.7	80	1.09
	500	0.7	80	1.33
	560	0.7	80	1.67
	600	0.7	80	1.98
	630	0.7	80	2.30
710	250	0.7	80	0.46
	280	0.7	80	0.53
	300	0.7	80	0.58
	315	0.7	80	0.62
	355	0.7	80	0.73
	400	0.7	80	0.87
	450	0.7	80	1.05
	500	0.7	80	1.25
	560	0.7	80	1.55
	600	0.7	80	1.79
	630	0.7	80	1.99
	710	0.7	110	3.14

Collar saddle for smoke extraction systems

SPSL-SMO

$Ød_{nom}$ [mm]	$Ød_{3\ nom}$ [mm]	Sheet thickness t [mm]	H [mm]	Weight [kg]
800	250	0.9	80	0.59
	280	0.9	80	0.67
	300	0.9	80	0.73
	315	0.9	80	0.78
	355	0.9	80	0.92
	400	0.9	80	1.08
	450	0.9	80	1.29
	500	0.9	80	1.53
	560	0.9	80	1.87
	600	0.9	80	2.14
	630	0.9	80	2.35
	710	0.9	110	3.52
	800	0.9	110	4.83
900	315	0.9	80	0.77
	355	0.9	80	0.90
	400	0.9	80	1.05
	450	0.9	80	1.25
	500	0.9	80	1.47
	560	0.9	80	1.78
	600	0.9	80	2.01
	630	0.9	80	2.20
	710	0.9	110	3.26
	800	0.9	110	4.20
	900	0.9	110	5.80
1000	315	0.9	80	0.76
	355	0.9	80	0.88
	400	0.9	80	1.03
	450	0.9	80	1.22
	500	0.9	80	1.43
	560	0.9	80	1.71
	600	0.9	80	1.93
	630	0.9	80	2.09
	710	0.9	110	3.09
	800	0.9	110	3.89
	900	0.9	110	5.05
	1000	0.9	130	6.85

Male coupling for smoke extraction systems

NSL-SMO

Description

NSL-SMO male coupling, fire resistance class: E_{600} 120 (h_o) S1500 single, designed for single-compartment smoke extraction systems and combined (dual-function) systems. The coupling is used for connecting SPR-SMO ducts or female fittings, it is equipped with GASK double lip seals for ventilation fittings made of EPDM and 1.8 mm thick and 10 mm wide intumescent seal. Welding points and other joints are covered with high-temperature sealant. SMOKE System fittings are available in diameters from 100 to 1000 mm.

Order example: NSL-SMO-200.

Product code example

Product code: **NSL-SMO - aaa**

type

Ød

Dimensions

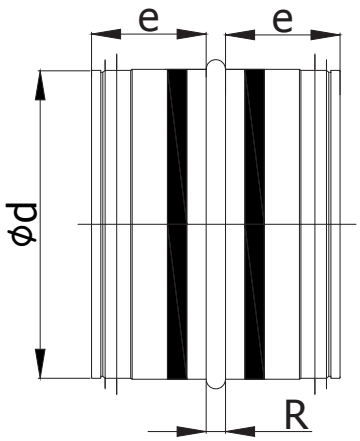

$Ød_{1\ nom}$ [mm]	L [mm]	Weight [kg]
100	8	0.23
125	8	0.29
140	8	0.32
150	8	0.34
160	8	0.36
180	8	0.41
200	8	0.45
224	8	0.51
250	8	0.57
280	8	0.64
300	8	0.68
315	8	0.72
355	10	0.81
400	10	0.91
450	10	1.33
500	10	1.48
560	10	1.66
600	10	1.78
630	10	1.87
710	12	2.72
800	12	3.93
900	12	4.47
1000	12	5.69

Female coupling for smoke extraction systems

MSF-SMO

Description

MSF-SMO female coupling, fire resistance class: E_{600} 120 (h_o) S1500 single, designed for single-compartment smoke extraction systems and combined (dual-function) systems. The coupling is used for connecting male fittings, it is equipped with two GASK double lip seals for ventilation fittings made of EPDM rubber and 1.8 mm thick and 10 mm wide intumescent seal. Welding points and other joints are covered with high-temperature sealant. SMOKE System fittings are available in diameters from 100 to 1000 mm.

Order example: MSF-SMO-200.

Product code example

Product code: **MSF-SMO - aaa**

type

Ød

Dimensions

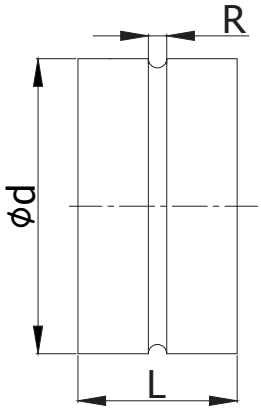

Ød [mm]	R [mm]	L [mm]	Weight [kg]
100	8	120	0.21
125	8	120	0.26
140	8	120	0.30
150	8	120	0.32
160	8	120	0.34
180	8	120	0.38
200	8	120	0.42
224	8	120	0.47
250	8	120	0.52
280	8	120	0.59
300	8	120	0.63
315	8	120	0.66
355	10	120	0.74
400	10	120	0.84
450	10	160	1.25
500	10	160	1.39
560	10	160	1.56
600	10	160	1.67
630	10	160	1.75
710	12	212	2.61
800	12	212	3.78
900	12	212	4.25
1000	12	242	5.41

Segmented branch for the smoke extraction system

ILSL-SMO

Description

ILSL-SMO segmented branch with male end, fire resistance class:E_{600} 120 (h_o) S1500 single, designed for single-compartment smoke extraction systems and combined (dual-function) systems. It is equipped with GASK double lip seals for ventilation fittings made of EPDM rubber and a 1.8 mm thick and 10 mm wide intumescent seal. Welding points and other joints are covered with high-temperature sealant, which should be also used for sealing the connection of ILSL-SMO with another duct. SMOKE System fittings are available in diameters from 100 to 1000 mm.

Order example: ILSL-SMO-300

Product code example

Product code: **ILSL-SMO - aaa**

type

Ød

Dimensions

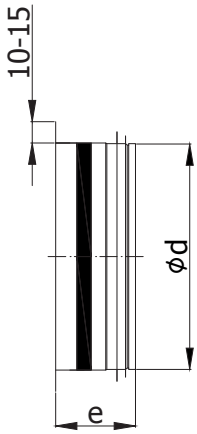

Ød [mm]	Weight [kg]
100	0,13
125	0,17
140	0,19
150	0,20
160	0,21
180	0,24
200	0,27
224	0,30
250	0,33
280	0,37
300	0,40
315	0,42
355	0,47
400	0,53
450	0,76
500	0,84
560	0,94
600	1,01
630	1,06
710	1,56
800	2,26
900	2,54
1000	3,01

Take-off with a mesh for smoke extraction system

ILSNL-SMO

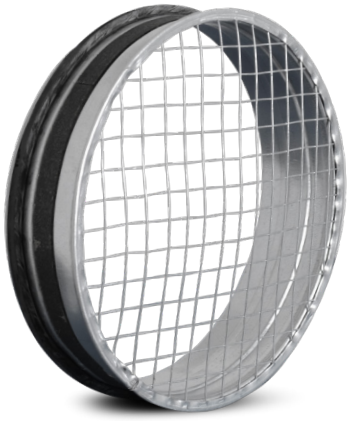

Description

ILSNL-SMO male take-off with mesh, fire resistance class: E_{600} 120 (h_o) S1500 single, designed for single-compartment smoke extraction systems and combined (dual-function) systems. It serves as an exhaust end piece, equipped with GASK double lip seals for ventilation fittings made of EPDM rubber and a 1.8 mm thick and 10 mm wide intumescent seal. Welding points and other joints are covered with high-temperature sealant. SMOKE System fittings are available in diameters from 100 to 1000 mm.

Order example: ILSNL-SMO-200

Product code example

Product code: **ILSNL-SMO - aaa**

type

Ød

Dimensions

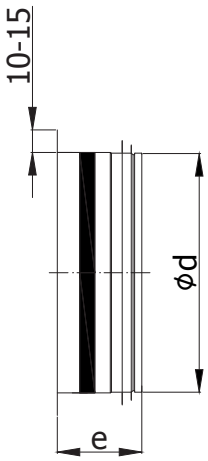

Ød [mm]	Weight [kg]
100	0.14
125	0.18
140	0.20
150	0.21
160	0.23
180	0.25
200	0.28
224	0.31
250	0.35
280	0.39
300	0.43
315	0.47
355	0.52
400	0.58
450	0.86
500	0.94
560	1.04
600	1.20
630	1.26
710	2.06
800	2.86
900	3.44
1000	4.01

Female take-off with a mesh for smoke extraction system

ILSNF-SMO

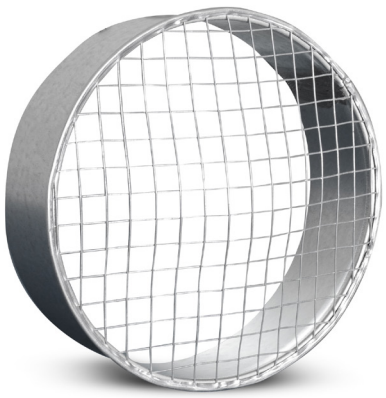

Description

ILSNF-SMO female take-off with mesh, fire resistance class: E_{600} 120 (h_o) S1500 single, designed for single-compartment smoke extraction systems and combined (dual-function) systems. Serves as an exhaust end piece. Welding points and other joints are covered with high-temperature sealant. SMOKE System fittings are available in diameters from 100 to 1000 mm.

Order example: ILSNF-SMO-200

Product code example

Product code: **ILSNF-SMO - aaa**

type

Ød

Dimensions

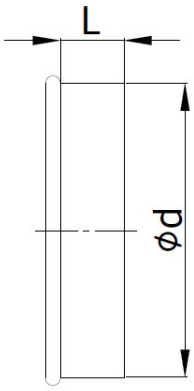

$Ød_{nom}$ [mm]	L [mm]	Weight [kg]
100	60	0.14
125	60	0.18
140	60	0.20
150	60	0.21
160	60	0.23
180	60	0.25
200	60	0.28
224	60	0.31
250	60	0.35
280	60	0.39
300	60	0.43
315	60	0.47
355	60	0.52
400	60	0.58
450	80	0.86
500	80	0.94
560	80	1.04
600	80	1.20
630	80	1.26
710	105	2.06
800	105	2.86
900	105	3.44
1000	120	4.01

Angle take-off with mesh

ASVL-45-SMO

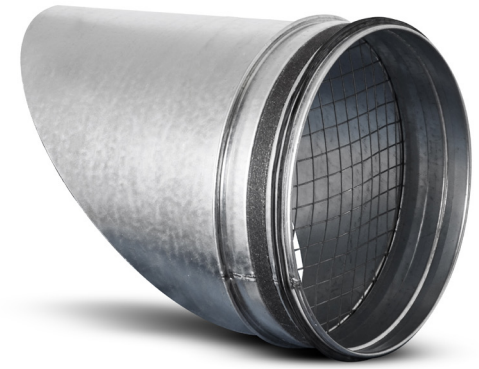

Description

ASVL-45-SMO angle take-off with mesh, with male end ASVL-45-SMO with fire resistance E_{600} 120 (h_o) S1500 singles designed for single-compartment smoke extraction systems and mixed (dual-function) systems. The 12.7x12.7 mm mesh, a drip directed at 45° angle, GASK double lip gasket for ventilation fittings made of EPDM rubber and a 1.8 mm thick and 10 mm wide intumescent seal. Welding points and other joints are covered with high-temperature sealant. SMOKE System fittings are available in diameters from 100 to 1000 mm.

Product code example

Product code: **ASVL-45-SMO - aaa**

type

Ød

Dimensions

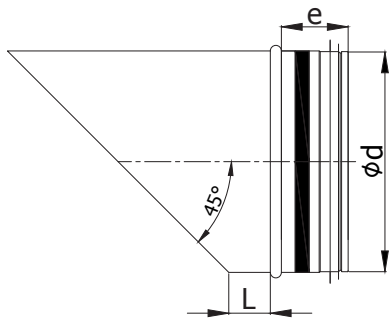

$Ød_{1\ nom}$ [mm]	L [mm]	Weight [kg]
100	20	0.27
125	30	0.39
140	30	0.45
150	30	0.49
160	30	0.55
180	30	0.64
200	30	0.74
224	30	0.88
250	60	1.18
280	60	1.39
300	60	1.55
315	60	1.69
355	60	2.02
400	60	2.42
450	90	3.35
500	90	3.93
560	90	4.68
600	90	1.20
630	90	5.75
710	120	7.98
800	120	12.23
900	120	14.98
1000	120	17.95

Flexible duct connector for smoke extraction systems

ILA-NSL-SMO-SIL

Description

ILA-NSL-SMO-SIL flexible duct connector with male ends (thermal expansion joint), fire resistance class:E_{600} 120 (h_o) S1500 single, designed for single-compartment smoke extraction systems and combined (dual-function) systems. The flexible duct connector is made of AMT flexible duct connector tape, a joint consisting of a layer of silicone coated fabric and two strips of sheet metal on both sides, it is equipped with GASK double lip seals for ventilation fittings made of EPDM and a 1.8 mm thick and 10 mm wide intumescent seal. Welding points and other joints are covered with high-temperature sealant. SMOKE System fittings are available in diameters from 100 to 1000 mm.
Flexible duct connectors should be used for ducts longer than 5 m. The maximum permissible distance between flexible duct connectors must not exceed 10 m.

Available materials — product marking example:
ILA-NSL-SMO-SIL-…- galvanized steel sheet, silicone coated fabric

Przykład zamówienia: ILA-NSL-SMO-SIL-200

Product code example
Product code: **ILA-NSL-SMO - SIL - bbb**

type
fabric
diameter

Dimensions

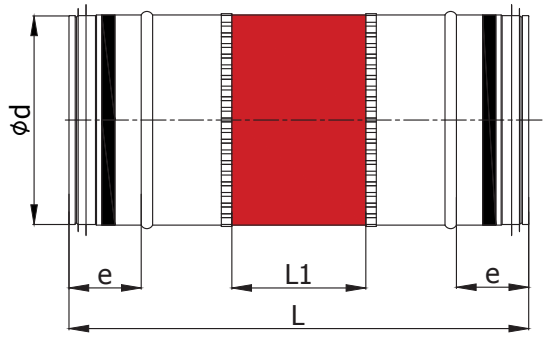

$Ød_{nom}$ [mm]	L_1 [mm]	L [mm]
100	100	350
125	100	350
140	100	350
150	100	350
160	100	350
180	100	350
200	100	350
224	100	350
250	100	350
280	100	350
300	100	350
315	100	350
355	100	350
400	100	350
450	100	390
500	100	390
560	100	390
600	100	390
630	100	390
710	100	440
800	100	440
900	100	440
1000	100	470

Flexible duct connector with flanges for smoke extraction systems

ILA-FLS-SMO-SIL

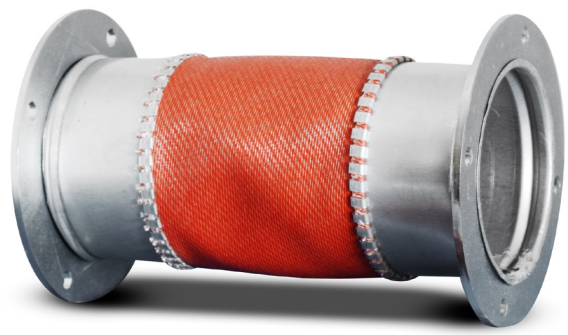

Wymiary

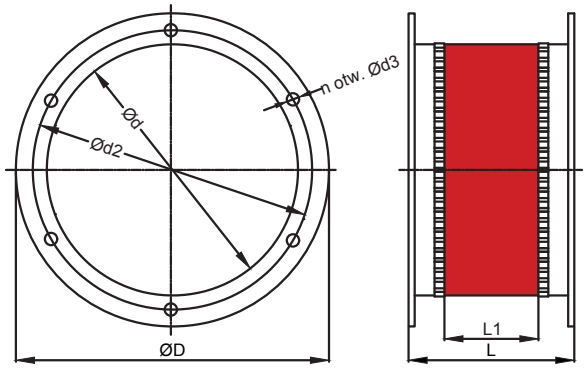

Description

ILA-FLS-SMO-SIL flexible duct connector with flanges (thermal expansion joint), fire resistance class:E600 120 (ho) S1500 single, designed for single-compartment smoke extraction systems and combined (dual-function) systems. The connector is made of AMT tape, a joint consisting of a layer of silicone coated fabric and two strips of sheet metal on both sides. Welding points and other joints are covered with high-temperature sealant. SMOKE System fittings are available in diameters from 100 to 1000 mm.
Flexible duct connector should be used for ducts longer than 5 m. The maximum permissible distance between flexible duct connector must not exceed 10 m.

Available materials - product marking example:
ILA-FLS-SMO-SIL-…- galvanized steel sheet, silicone coated fabric

Order example: ILA-FLS-SMO-SIL-200

Product code example
Product code: **ILA-FLS-SMO - SIL - bbb**

type
fabric
diameter

$Ød_{nom}$ [mm]	ØD [mm]	$Ød_2$ [mm]	$Ød_3$ [mm]	n [pcs.]	L_1 [mm]	L [mm]
100	132	132	9.5	4	100	210
112	152	144	9.5	4	100	210
125	177	157	9.5	4	100	210
140	192	172	9.5	6	100	210
150	202	182	9.5	6	100	210
160	212	192	9.5	6	100	210
180	232	212	9.5	6	100	210
200	253	233	9.5	6	100	210
224	277	257	9.5	6	100	210
250	303	283	9.5	6	100	210
280	343	317	9.5	8	100	210
300	363	337	9.5	8	100	210
315	378	352	9.5	8	100	210
355	418	392	9.5	8	100	210
400	464	438	9.5	8	100	210
450	514	488	9.5	8	100	210
500	564	538	9.5	8	100	210
560	634	600	9.5	12	100	210
600	676	640	9.5	12	100	210
630	704	670	9.5	12	100	210
710	784	750	9.5	12	100	210
800	874	840	9.5	16	100	210
900	974	940	9.5	16	100	210
1000	1075	1041	9.5	16	100	210

Male end cap for smoke extraction system

CSL-SMO

Description

CSL-SMO segmented male end cap, fire resistance class: E_{600} 120 (h_o) S1500 single, designed for single-compartment smoke extraction systems and combined (dual-function) systems. It is equipped with GASK double lip seals for ventilation fittings made of EPDM rubber and a 1.8 mm thick and 10 mm wide intumescent seal. Welding points and other joints are covered with high-temperature sealant. SMOKE System fittings are available in diameters from 100 to 1000 mm.

Order example: CSL-SMO-200

Product code example

Product code: **CSL-SMO - aaa**

type

Ød

Dimensions

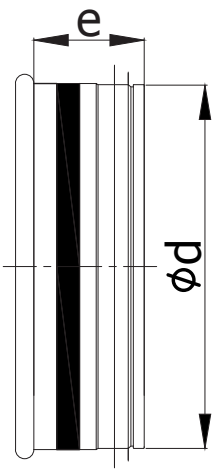

Ød [mm]	Weight [kg]
100	0.17
125	0.24
140	0.28
150	0.30
160	0.33
180	0.39
200	0.45
224	0.53
250	0.62
280	0.73
300	0.81
315	0.87
355	1.04
400	1.26
450	1.68
500	1.97
560	2.35
600	2.62
630	2.83
710	3.79
800	5.94
900	7.14
1000	8.72

Female end cap for smoke extraction systems

CSF-SMO

Description

CSF-SMO segmented female end cap, fire resistance class: E_{600} 120 (h_o) S1500 single, designed for single-compartment smoke extraction systems and combined (dual-function) systems. Welding points and other joints are covered with high-temperature sealant. SMOKE System fittings are available in diameters from 100 to 1000 mm.

Order example: CSF-SMO-200

Product code example

Product code: **CSF-SMO - aaa**

type

Ød

Dimensions

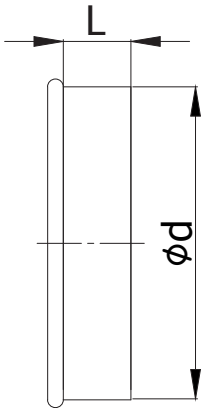

$Ød_{nom}$ [mm]	L [mm]	Weight [kg]
100	60	0.17
125	60	0.24
140	60	0.28
150	60	0.30
160	60	0.33
180	60	0.39
200	60	0.45
224	60	0.53
250	60	0.62
280	60	0.73
300	60	0.81
315	60	0.87
355	60	1.04
400	60	1.26
450	80	1.68
500	80	1.97
560	80	2.35
600	80	2.62
630	80	2.83
710	105	3.79
800	105	5.94
900	105	7.14
1000	120	8.72

Female end cap with a handle for smoke extraction system

CSFH-SMO

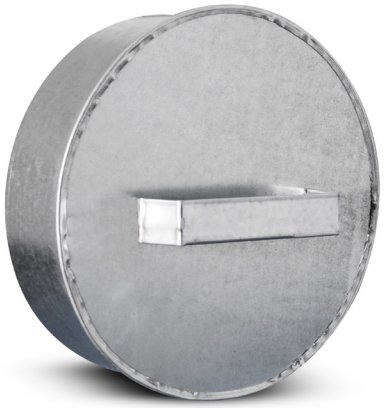

Description

CSFH-SMO segmented female end cap with handle, fire resistance class:E_{600} 120 (h_o) S1500 single, designed for single-compartment smoke extraction systems and combined (dual-function) systems. Welding points and other joints are covered with high-temperature sealant. SMOKE System fittings are available in diameters from 100 to 1000 mm.
There is a handle available for Ø100÷ Ø 224.
There are two handles available for Ø250÷ Ø 1000.

Order example: CSFH-SMO-200

Product code example
Product code: **CSFH-SMO - aaa**

type
Ød

Dimensions

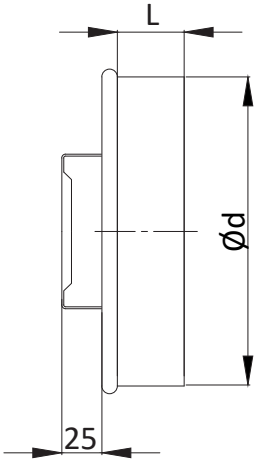

$Ød_{nom}$ [mm]	L [mm]	Weight [kg]
100	60	0.17
125	60	0.24
140	60	0.28
150	60	0.30
160	60	0.33
180	60	0.39
200	60	0.45
224	60	0.53
250	60	0.62
280	60	0.73
300	60	0.81
315	60	0.87
355	60	1.04
400	60	1.26
450	80	1.68
500	80	1.97
560	80	2.35
600	80	2.62
630	80	2.83
710	105	3.79
800	105	5.94
900	105	7.14
1000	120	8.72

Smoke extraction grille

SGR-SMO

Description

SGR-SMO grilles are used for exhaust air in smoke extraction ducts, fire resistance class: E_{600} 120 (h_o) S1500 single, designed for single-compartment smoke extraction systems and combined (dual-function) systems. Front frame is made of pressed steel profiles, adhering to the profile of a circular air duct. Blades made of rolled steel plate profile. Horizontal or vertical fixture of blades, inclination angle of the blades of the grille is 90˚. If one of the dimensions of the mounting hole A or B exceeds 550 mm, the grille is equipped with a bracing bracket made of galvanized steel sheet.

Assembly:
The grille is mounted directly on the circular duct (without sealing materials) using visible screws in all extruded holes in the front frame.

Dimension of mounting hole A or B [mm]

A or B < 550	Without bracing brackets
550 < A or B < 750	One bracket
A or B > 750	Two brackets

Available materials — product marking example:
SGR-SMO-0H - galvanized steel, horizontal fixture of blade
SGR-SMO-0V - galvanized steel, vertical fixture of blade

Product code example
Product code: SGR-SMO - aa - bbb - ccc - ddd

type
version
dimension A
dimension B
duct diameter

Dimensions

Grille with fixed vertical blades - SGR-SMO-0H.

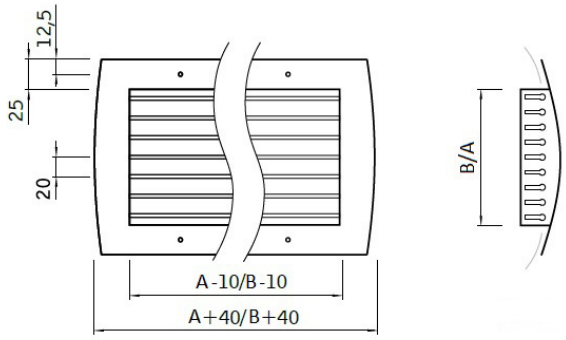

Grille with fixed horizontal blades - SGR-SMO-0V.

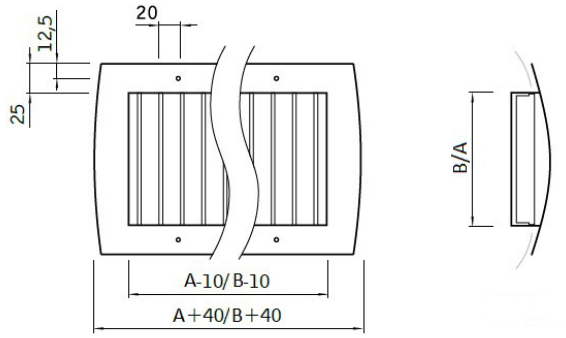

Dimension AxB [mm]	*Duct diameter [mm]*	*Area [m²]*	*Weigh [kg]*
125x75	Ø100; Ø125; Ø140; Ø150; Ø160; Ø180; Ø200	0.0066	0.5
325x75	Ø280; Ø300	0.0186	0.9
525x75	Ø355	0.0306	1.3
125x125	Ø224; Ø250;	0.0121	0.9
225x125	Ø315	0.0231	1.1
325x125	Ø400	0.0341	1.3
425x125	Ø450	0.0451	1.5
525x125	Ø500	0.0561	1.7
325x225	Ø560; Ø600; Ø630	0.0651	1.9
525x225	Ø710	0.1071	3.1
825x225	Ø900; Ø1000	0.1701	4.8

Smoke extraction grille

SGR-SMO

Technical data

Q [m³/h]	Type	75 x 125	125 x 125	75 x 325	125 x 225	75 x 525	125 x 325	125 x 425	125 x 525	225 x 325	225 x 525	225 x 825
	Aef[m2]	0.0066	0.0121	0.0186	0.0231	0.0306	0.0341	0.0451	0.0561	0.0651	0.1071	0.1701
20	Dp [Pa]	24.2										
	L [m]	4.6										
	L_{WA}[dB(A)]	<35										
40	Dp [Pa]	98.4	20.4									
	L [m]	7.9	4.6									
	L_{WA}[dB(A)]	<40	<35									
60	Dp [Pa]	223	46.5	15.3								
	L [m]	9.8	6.8	4.6								
	L_{WA}[dB(A)]	<45	<40	30								
80	Dp [Pa]	400	83.4	27.5	15.7							
	L [m]	11.1	8.3	6.3	5.2							
	L_{WA}[dB(A)]	50	40	<35	<35							
100	Dp [Pa]	628	131	43.3	24.8	12	9.1					
	L [m]	12.2	9.5	7.5	6.5	5.3	4.8					
	L_{WA}[dB(A)]	>50	45	35	<35	30	30					
150	Dp [Pa]	1425	299	99	56.7	27.5	20.8	10.1	5.8			
	L [m]	14.1	11.6	9.8	8.9	7.8	7.3	6.2	5.3			
	L_{WA}[dB(A)]	>50	50	40	<40	35	<35	30	<30			
200	Dp [Pa]	2549	537	178	102	49.6	37.5	18.3	10.5	7.1		
	L [m]	15.5	13.1	11.5	10.6	9.5	9.1	8	7.2	6.6		
	L_{WA}[dB(A)]	>50	>50	<50	40	<40	<40	<35	<35	<30		
300	Dp [Pa]		1225	407	234	114	86.2	42.1	24.1	16.5	4.6	1.4
	L [m]		15.3	13.8	13	12	11.7	10.7	9.9	9.4	7.7	6.1
	L_{WA}[dB(A)]		>50	>50	<50	<45	40	<40	35	<35	<30	<30
400	Dp [Pa]		2199	733	421	205	156	76.1	43.6	29.8	8.3	2.6
	L [m]		16.8	15.4	14.7	13.8	13.5	12.6	11.9	11.4	9.8	8.3
	L_{WA}[dB(A)]		>50	10.3	8.2	50	<50	40	<40	<40	30	<30
500	Dp [Pa]			1155	664	324	246	120	69	47.2	13.2	4.1
	L [m]			16.7	16	15.2	14.9	14	13.4	12.9	11.4	10.1
	L_{WA}[dB(A)]			>50	>50	>50	50	45	40	<40	<35	<30
600	Dp [Pa]			1676	965	471	357	175	100	68.7	19.3	5.9
	L [m]			17.7	17.1	16.3	16	15.2	14.6	14.2	12.8	11.5
	L_{WA}[dB(A)]			>50	>50	9.3	8.3	<50	<45	40	<35	30
700	Dp [Pa]				1322	646	490	241	138	94.5	26.6	8.2
	L [m]				18	17.2	17	16.2	15.6	15.2	13.9	12.7
	L_{WA}[dB(A)]				>50	>50	>50	>50	45	<45	<40	<35
800	Dp [Pa]					849	645	317	182	124	35.1	10.8
	L [m]					18.1	17.8	17.1	16.5	16.2	14.9	13.7
	L_{WA}[dB(A)]					12.4	11.1	>50	50	<50	<40	<35
1000	Dp [Pa]					1342	1019	501	288	197	55.7	17.2
	L [m]					19.4	19.2	18.5	18	17.7	16.5	15.5
	L_{WA}[dB(A)]					>50	>50	>50	>50	50	<40	35

Kratka oddymiająca SMOKE System

SGR-SMO

Q [m³/h]	Type	75 x 125	125 x 125	75 x 325	125 x 225	75 x 525	125 x 325	125 x 425	125 x 525	225 x 325	225 x 525	225 x 825
	Aef[m²]	0.0066	0.0121	0.0186	0.0231	0.0306	0.0341	0.0451	0.0561	0.0651	0.1071	0.1701
1200	Dp [Pa]						1481	729	419	287	81.2	25.1
	L [m]						20.3	19.7	19.3	18.9	17.9	16.9
	L_{WA}[dB(A)]						>50	>50	>50	>50	<45	<40
1400	Dp [Pa]							1000	575	395	112	34.6
	L [m]							20.7	20.3	20	19	18.1
	L_{WA}[dB(A)]							>50	>50	>50	45	<40
1600	Dp [Pa]								758	520	147	45.7
	L [m]								21.2	20.9	20	19.1
	L_{WA}[dB(A)]								>50	>50	<50	<40
1800	Dp [Pa]								966	663	188	58.4
	L [m]								22	21.7	20.8	20
	L_{WA}[dB(A)]								>50	12.9	50	<45
2000	Dp [Pa]									824	234	72.6
	L [m]									22.4	21.6	20.8
	L_{WA}[dB(A)]									>50	>50	<45

Aef[m²] – effective grille area;
Dp [Pa] – pressure loss;
L [m] – range;
LWA[dB(A)] – sound pressure level;

Silencer for circular smoke extraction systems

SIL-GL-SMO

Description

SIL-GL-SMO circular silencer, fire resistance class:E600 120 (ho) S1500 single, designed for single-compartment smoke extraction systems and combined (dual-function) systems. It is equipped with GASK double lip seals for GASK ventilation fittings made of EPDM and a 1.8 mm thick and 10 mm wide intumescent seal. Welding points and other joints are covered with high-temperature sealant. SMOKE System fittings are available in diameters from 100 to 1000 mm.
SIL-GL-SMO circular silencers consist of inner jacket made of perforated metal sheet, filling in the form of glass wool with a thickness of 50mm or 100mm with a minimum density of 10 kg/m^3 and outer coat.

Available materials — product marking example:
SIL-GL-SMO-50-… - galvanized steel, 50 mm thick glass wool
SIL-GL-SMO-100-… - galvanized steel, 100 mm thick glass wool

Order example: SIL-GL-SMO-100-400-900

Product code example
Product code: **SIL-GL - aaa - bbb - ccc**

type
insulation thickness
diameter d_1
length

Diemensions

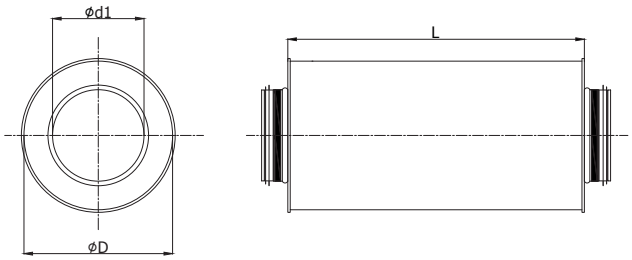

Silencer for circular smoke extraction systems

SIL-GL-SMO

For SIL-GL-SMO-50 - 50 mm of insulation

Product code	Ød$_1$ [mm]	D [mm]	L [mm]	attenuation [dB] for frequency [Hz]							Weight [kg]
				125	250	500	1000	2000	4000	8000	
SIL-GL-SMO-50-100-300	100	200	300	5	13	26	41	44	22	24	2
SIL-GL-SMO-50-100-500	100	200	500	8	16	29	44	47	26	27	4
SIL-GL-SMO-50-100-600	100	200	600	9	17	30	45	49	27	29	4
SIL-GL-SMO-50-100-900	100	200	900	12	19	32	48	51	29	31	6
SIL-GL-SMO-50-100-1000	100	200	1000	13	21	34	49	52	30	32	7
SIL-GL-SMO-50-100-1200	100	200	1200	15	23	35	50	54	32	34	8
SIL-GL-SMO-50-125-300	125	224	300	4	11	22	37	41	19	21	3
SIL-GL-SMO-50-125-500	125	224	500	7	14	26	40	44	22	24	4
SIL-GL-SMO-50-125-600	125	224	600	8	15	27	41	45	24	25	5
SIL-GL-SMO-50-125-900	125	224	900	11	18	29	44	47	26	28	7
SIL-GL-SMO-50-125-1000	125	224	1000	12	19	31	45	49	27	29	8
SIL-GL-SMO-50-125-1200	125	224	1200	14	21	32	46	50	29	31	9
SIL-GL-SMO-50-150-300	150	250	300	4	11	23	34	36	18	19	3
SIL-GL-SMO-50-150-500	150	250	500	7	14	26	37	39	21	22	5
SIL-GL-SMO-50-150-600	150	250	600	8	15	27	39	41	22	23	6
SIL-GL-SMO-50-150-900	150	250	900	11	18	29	42	43	25	26	8
SIL-GL-SMO-50-150-1000	150	250	1000	12	19	30	42	44	26	27	9
SIL-GL-SMO-50-150-1200	150	250	1200	14	21	32	44	46	27	28	10
SIL-GL-SMO-50-160-300	160	250	300	3	9	20	33	35	16	18	3
SIL-GL-SMO-50-160-500	160	250	500	6	12	23	36	38	19	21	5
SIL-GL-SMO-50-160-600	160	250	600	7	14	24	37	39	21	22	6
SIL-GL-SMO-50-160-900	160	250	900	10	16	26	40	42	23	25	8
SIL-GL-SMO-50-160-1000	160	250	1000	11	17	28	41	43	24	26	9
SIL-GL-SMO-50-160-1200	160	250	1200	13	19	29	42	44	26	27	11
SIL-GL-SMO-50-200-300	200	315	300	2	7	16	31	31	15	16	4
SIL-GL-SMO-50-200-500	200	315	500	5	10	19	34	34	18	19	6
SIL-GL-SMO-50-200-600	200	315	600	6	11	20	35	35	19	20	7
SIL-GL-SMO-50-200-900	200	315	900	8	13	23	38	38	22	23	10
SIL-GL-SMO-50-200-1000	200	315	1000	9	15	24	39	39	23	24	11
SIL-GL-SMO-50-200-1200	200	315	1200	11	17	26	41	41	25	26	13
SIL-GL-SMO-50-250-500	250	355	500	4	9	18	29	27	15	16	7
SIL-GL-SMO-50-250-600	250	355	600	5	11	19	30	28	16	18	8
SIL-GL-SMO-50-250-900	250	355	900	8	13	22	33	31	19	20	12
SIL-GL-SMO-50-250-1000	250	355	1000	9	14	23	33	32	20	21	13
SIL-GL-SMO-50-250-1200	250	355	1200	11	17	25	35	34	21	23	15
SIL-GL-SMO-50-250-1500	250	355	1500	12	18	26	37	35	23	24	19
SIL-GL-SMO-50-300-500	300	400	500	4	8	16	25	23	13	15	9
SIL-GL-SMO-50-300-600	300	400	600	5	10	18	27	25	14	16	10
SIL-GL-SMO-50-300-900	300	400	900	7	12	20	30	27	17	18	14
SIL-GL-SMO-50-300-1000	300	400	1000	8	13	21	30	28	18	19	15
SIL-GL-SMO-50-300-1200	300	400	1200	10	15	23	32	30	20	21	18
SIL-GL-SMO-50-300-1500	300	400	1500	12	17	24	34	32	21	23	22

Silencer for circular smoke extraction systems

SIL-GL-SMO

Product code	Ød$_1$ [mm]	D [mm]	L [mm]	attenuation [dB] for frequency [Hz]							Weight [kg]
				125	250	500	1000	2000	4000	8000	
SIL-GL-SMO-50-315-500	315	400	500	4	7	14	23	21	13	14	9
SIL-GL-SMO-50-315-600	315	400	600	5	8	16	25	19	14	15	10
SIL-GL-SMO-50-315-900	315	400	900	7	11	18	28	21	17	18	15
SIL-GL-SMO-50-315-1000	315	400	1000	8	12	19	28	22	18	19	16
SIL-GL-SMO-50-315-1200	315	400	1200	10	14	21	30	24	19	21	19
SIL-GL-SMO-50-315-1500	315	400	1500	12	16	23	32	26	21	22	23
SIL-GL-SMO-50-355-600	355	450	600	4	9	16	22	17	13	14	11
SIL-GL-SMO-50-355-900	355	450	900	7	11	19	25	19	16	17	16
SIL-GL-SMO-50-355-1000	355	450	1000	8	12	20	26	21	17	18	18
SIL-GL-SMO-50-355-1200	355	450	1200	10	15	22	27	22	18	20	21
SIL-GL-SMO-50-355-1500	355	450	1500	11	16	23	29	24	20	21	25
SIL-GL-SMO-50-400-600	400	500	600	4	8	15	20	15	12	13	13
SIL-GL-SMO-50-400-900	400	500	900	6	10	18	23	17	15	16	18
SIL-GL-SMO-50-400-1000	400	500	1000	8	12	19	24	18	16	17	20
SIL-GL-SMO-50-400-1200	400	500	1200	9	14	21	25	20	17	19	23
SIL-GL-SMO-50-400-1500	400	500	1500	11	15	22	27	22	19	20	28
SIL-GL-SMO-50-450-600	450	560	600	4	8	16	18	13	12	12	14
SIL-GL-SMO-50-450-900	450	560	900	6	11	18	21	16	15	15	20
SIL-GL-SMO-50-450-1000	450	560	1000	7	12	19	22	17	16	16	22
SIL-GL-SMO-50-450-1200	450	560	1200	9	14	21	23	18	17	17	26
SIL-GL-SMO-50-450-1500	450	560	1500	11	16	23	25	20	19	19	31
SIL-GL-SMO-50-500-600	500	600	600	3	7	14	17	11	11	12	16
SIL-GL-SMO-50-500-900	500	600	900	6	9	16	20	14	13	14	22
SIL-GL-SMO-50-500-1000	500	600	1000	7	11	17	21	15	14	15	24
SIL-GL-SMO-50-500-1200	500	600	1200	9	13	19	22	17	16	17	28
SIL-GL-SMO-50-500-1500	500	600	1500	10	14	20	24	18	17	19	34
SIL-GL-SMO-50-560-900	560	630	900	6	9	15	19	13	12	14	24
SIL-GL-SMO-50-560-1000	560	630	1000	7	10	16	20	14	13	15	27
SIL-GL-SMO-50-560-1200	560	630	1200	9	13	18	21	15	15	16	31
SIL-GL-SMO-50-630-900	630	710	900	5	8	14	18	11	12	13	27
SIL-GL-SMO-50-630-1000	630	710	1000	6	10	16	18	12	13	14	30
SIL-GL-SMO-50-630-1200	630	710	1200	8	12	17	20	14	14	15	35

Silencer for circular smoke extraction systems

SIL-GL-SMO

For SIL-GL-SMO-100 - 100 mm of insulation

Product code	*Ød$_1$ [mm]*	*D [mm]*	*L [mm]*	*attenuation [dB] for frequency [Hz]*							*Weight [kg]*
				125	250	500	1000	2000	4000	8000	
SIL-GL-SMO-100-100-500	100	300	500	20	29	40	44	52	27	27	4
SIL-GL-SMO-100-100-600	100	300	600	21	30	44	48	53	29	28	5
SIL-GL-SMO-100-100-900	100	300	900	22	34	52	57	57	32	31	7
SIL-GL-SMO-100-100-1000	100	300	1000	22	34	55	60	58	33	33	8
SIL-GL-SMO-100-100-1200	100	300	1200	24	37	58	64	61	34	34	9
SIL-GL-SMO-100-125-300	125	315	300	17	24	38	42	51	26	28	3
SIL-GL-SMO-100-125-500	125	315	500	18	26	36	42	49	25	25	5
SIL-GL-SMO-100-125-600	125	315	600	18	26	36	42	49	25	25	6
SIL-GL-SMO-100-125-900	125	315	900	20	30	48	55	54	29	30	8
SIL-GL-SMO-100-125-1000	125	315	1000	20	31	51	58	55	31	31	9
SIL-GL-SMO-100-125-1200	125	315	1200	21	34	54	62	58	31	33	11
SIL-GL-SMO-100-150-300	150	355	300	15	21	33	37	44	23	25	4
SIL-GL-SMO-100-150-500	150	355	500	20	29	40	44	52	27	27	6
SIL-GL-SMO-100-150-600	150	355	600	17	25	36	41	43	23	24	6
SIL-GL-SMO-100-150-900	150	355	900	18	28	44	50	47	26	27	9
SIL-GL-SMO-100-150-1000	150	355	1000	18	28	47	53	48	28	28	10
SIL-GL-SMO-100-150-1200	150	355	1200	24	37	58	64	61	34	34	12
SIL-GL-SMO-100-160-300	160	355	300	16	21	29	34	41	20	23	4
SIL-GL-SMO-100-160-500	160	355	500	17	23	28	34	39	19	20	6
SIL-GL-SMO-100-160-600	160	355	600	17	24	32	38	40	21	21	7
SIL-GL-SMO-100-160-900	160	355	900	18	27	40	47	44	24	25	10
SIL-GL-SMO-100-160-1000	160	355	1000	19	28	43	50	45	25	26	11
SIL-GL-SMO-100-160-1200	160	355	1200	20	31	46	54	48	26	28	13
SIL-GL-SMO-100-200-300	200	400	300	13	18	27	29	36	18	21	5
SIL-GL-SMO-100-200-500	200	400	500	14	20	25	28	34	17	18	7
SIL-GL-SMO-100-200-600	200	400	600	14	21	29	33	35	19	19	8
SIL-GL-SMO-100-200-900	200	400	900	15	25	38	42	39	22	22	11
SIL-GL-SMO-100-200-1000	200	400	1000	16	25	41	45	40	23	24	12
SIL-GL-SMO-100-200-1200	200	400	1200	17	28	43	48	43	24	26	15
SIL-GL-SMO-100-250-500	250	450	500	11	17	22	26	29	15	16	8
SIL-GL-SMO-100-250-600	250	450	600	12	18	26	30	30	17	17	10
SIL-GL-SMO-100-250-900	250	450	900	13	22	34	39	34	20	20	13
SIL-GL-SMO-100-250-1000	250	450	1000	14	22	37	42	35	21	22	15
SIL-GL-SMO-100-250-1200	250	450	1200	15	25	40	46	38	22	23	17
SIL-GL-SMO-100-250-1500	250	450	1500	16	29	44	51	42	23	26	21
SIL-GL-SMO-100-315-500	315	500	500	10	16	17	22	25	13	14	10
SIL-GL-SMO-100-315-600	315	500	600	14	17	21	26	26	15	15	11
SIL-GL-SMO-100-315-900	315	500	900	12	20	39	35	30	18	19	16
SIL-GL-SMO-100-315-1000	315	500	1000	12	21	32	38	31	19	20	18
SIL-GL-SMO-100-315-1200	315	500	1200	14	24	35	42	34	22	23	21
SIL-GL-SMO-100-315-1500	315	500	1500	15	28	39	47	38	21	25	26

Silencer for circular smoke extraction systems

SIL-GL-SMO

Product code	Ød$_1$ [mm]	D [mm]	L [mm]	attenuation [dB] for frequency [Hz]							Weight [kg]
				125	250	500	1000	2000	4000	8000	
SIL-GL-SMO-100-355-600	355	560	600	10	15	20	23	23	13	14	13
SIL-GL-SMO-100-355-900	355	560	900	11	19	28	32	27	16	18	18
SIL-GL-SMO-100-355-1000	355	560	1000	11	19	31	35	28	18	19	20
SIL-GL-SMO-100-355-1200	355	560	1200	13	22	34	39	31	18	21	23
SIL-GL-SMO-100-355-1500	355	560	1500	14	26	38	44	35	19	24	28
SIL-GL-SMO-100-400-600	400	600	600	9	15	18	21	20	12	11	14
SIL-GL-SMO-100-400-900	400	600	900	11	18	26	30	24	14	14	20
SIL-GL-SMO-100-400-1000	400	600	1000	11	18	29	33	25	16	16	22
SIL-GL-SMO-100-400-1200	400	600	1200	12	22	32	37	28	16	17	26
SIL-GL-SMO-100-400-1500	400	600	1500	14	26	36	42	32	17	20	31
SIL-GL-SMO-100-450-600	450	630	600	9	14	16	18	17	10	10	16
SIL-GL-SMO-100-450-900	450	630	900	10	17	24	27	21	13	13	22
SIL-GL-SMO-100-450-1000	450	630	1000	10	18	27	30	22	15	15	24
SIL-GL-SMO-100-450-1200	450	630	1200	11	21	30	34	25	15	16	28
SIL-GL-SMO-100-450-1500	450	630	1500	13	25	34	39	29	16	19	35
SIL-GL-SMO-100-500-600	500	710	600	8	13	14	15	15	10	9	17
SIL-GL-SMO-100-500-900	500	710	900	10	16	22	24	19	13	13	24
SIL-GL-SMO-100-500-1000	500	710	1000	10	17	25	27	20	14	14	26
SIL-GL-SMO-100-500-1200	500	710	1200	11	20	28	31	23	15	16	31
SIL-GL-SMO-100-500-1500	500	710	1500	13	24	32	36	27	16	19	38
SIL-GL-SMO-100-560-900	560	800	900	9	15	21	23	18	12	12	27
SIL-GL-SMO-100-560-1000	560	800	1000	9	16	24	26	19	13	13	29
SIL-GL-SMO-100-560-1200	560	800	1200	10	19	27	30	22	14	15	34
SIL-GL-SMO-100-560-1500	560	800	1500	12	23	30	35	26	15	18	42
SIL-GL-SMO-100-630-900	630	800	900	8	15	20	22	17	11	11	30
SIL-GL-SMO-100-630-1000	630	800	1000	9	15	23	25	18	12	12	32
SIL-GL-SMO-100-630-1200	630	800	1200	10	18	26	29	21	13	14	38
SIL-GL-SMO-100-630-1500	630	800	1500	11	22	29	34	25	14	17	47
SIL-GL-SMO-100-710-1000	710	900	1000	8	14	20	23	16	11	10	36
SIL-GL-SMO-100-710-1200	710	900	1200	9	17	23	27	18	11	12	43
SIL-GL-SMO-100-710-1500	710	900	1500	11	21	26	30	22	12	15	52
SIL-GL-SMO-100-800-1000	800	1000	1000	8	14	20	22	15	10	10	50
SIL-GL-SMO-100-800-1200	800	1000	1200	9	17	22	25	18	11	12	58
SIL-GL-SMO-100-800-1500	800	1000	1500	10	21	26	30	22	12	15	72
SIL-GL-SMO-100-900-1000	900	1120	1000	7	13	19	20	13	9	10	55
SIL-GL-SMO-100-900-1200	900	1120	1200	8	16	22	24	16	10	11	65
SIL-GL-SMO-100-900-1500	900	1120	1500	10	20	26	29	20	11	14	80
SIL-GL-SMO-100-1000-1200	1000	1200	1200	7	16	21	23	15	9	11	72
SIL-GL-SMO-100-1000-1500	1000	1200	1500	9	20	25	27	19	11	14	88

SIL-GL-SMO

Technical data

For SIL-GL-SMO-50 - 50 mm of insulation

Product code	pressure drop [Pa] for flow rate [m/s]				
	2	4	8	10	12
SIL-GL-SMO-50-100-300	0.36	1.42	5.68	8.88	12.79
SIL-GL-SMO-50-100-500	0.36	1.44	5.76	9.00	12.96
SIL-GL-SMO-50-100-600	0.37	1.47	5.88	9.18	13.22
SIL-GL-SMO-50-100-900	0.40	1.61	6.45	10.08	14.52
SIL-GL-SMO-50-100-1000	0.42	1.68	6.72	10.50	15.12
SIL-GL-SMO-50-100-1200	0.52	2.09	8.37	13.08	18.84
SIL-GL-SMO-50-125-300	0.29	1.15	4.61	7.20	10.37
SIL-GL-SMO-50-125-500	0.29	1.17	4.68	7.32	10.54
SIL-GL-SMO-50-125-600	0.30	1.20	4.80	7.50	10.80
SIL-GL-SMO-50-125-900	0.34	1.34	5.38	8.40	12.10
SIL-GL-SMO-50-125-1000	0.35	1.41	5.64	8.82	12.70
SIL-GL-SMO-50-125-1200	0.50	2.02	8.06	12.60	18.14
SIL-GL-SMO-50-150-300	0.34	1.34	5.38	8.40	12.10
SIL-GL-SMO-50-150-500	0.34	1.36	5.45	8.52	12.27
SIL-GL-SMO-50-150-600	0.35	1.39	5.57	8.70	12.53
SIL-GL-SMO-50-150-900	0.38	1.54	6.14	9.60	13.82
SIL-GL-SMO-50-150-1000	0.40	1.61	6.45	10.08	14.52
SIL-GL-SMO-50-150-1200	0.46	1.82	7.30	11.40	16.42
SIL-GL-SMO-50-160-300	0.24	0.96	3.84	6.00	8.64
SIL-GL-SMO-50-160-500	0.25	0.99	3.96	6.18	8.90
SIL-GL-SMO-50-160-600	0.25	1.02	4.07	6.36	9.16
SIL-GL-SMO-50-160-900	0.29	1.15	4.61	7.20	10.37
SIL-GL-SMO-50-160-1000	0.31	1.23	4.92	7.68	11.06
SIL-GL-SMO-50-160-1200	0.41	1.63	6.53	10.20	14.69
SIL-GL-SMO-50-200-300	0.17	0.67	2.69	4.20	6.05
SIL-GL-SMO-50-200-500	0.17	0.69	2.76	4.32	6.22
SIL-GL-SMO-50-200-600	0.18	0.72	2.88	4.50	6.48
SIL-GL-SMO-50-200-900	0.22	0.86	3.46	5.40	7.78
SIL-GL-SMO-50-200-1000	0.24	0.94	3.76	5.88	8.47
SIL-GL-SMO-50-200-1200	0.34	1.34	5.38	8.40	12.10
SIL-GL-SMO-50-250-500	0.18	0.74	2.96	4.62	6.65
SIL-GL-SMO-50-250-600	0.19	0.77	3.07	4.80	6.91
SIL-GL-SMO-50-250-900	0.23	0.91	3.65	5.70	8.21
SIL-GL-SMO-50-250-1000	0.25	0.99	3.96	6.18	8.90
SIL-GL-SMO-50-250-1200	0.35	1.39	5.57	8.70	12.53

Product code	pressure drop [Pa] for flow rate [m/s]				
	2	4	8	10	12
SIL-GL-SMO-50-250-1500	0.40	1.58	6.34	9.90	14.26
SIL-GL-SMO-50-300-500	0.15	0.59	2.34	3.66	5.27
SIL-GL-SMO-50-300-600	0.16	0.62	2.50	3.90	5.62
SIL-GL-SMO-50-300-900	1.90	7.58	30.34	47.40	68.26
SIL-GL-SMO-50-300-1000	0.21	0.84	3.34	5.22	7.52
SIL-GL-SMO-50-300-1200	0.31	1.24	4.95	7.74	11.15
SIL-GL-SMO-50-300-1500	0.37	1.50	5.99	9.36	13.48
SIL-GL-SMO-50-315-500	0.12	0.50	2.00	3.12	4.49
SIL-GL-SMO-50-315-600	0.13	0.53	2.11	3.30	4.75
SIL-GL-SMO-50-315-900	0.17	0.67	2.69	4.20	6.05
SIL-GL-SMO-50-315-1000	0.19	0.75	3.00	4.68	6.74
SIL-GL-SMO-50-315-1200	0.29	1.15	4.61	7.20	10.37
SIL-GL-SMO-50-315-1500	0.35	1.39	5.57	8.70	12.53
SIL-GL-SMO-50-355-600	0.11	0.43	1.73	2.70	3.89
SIL-GL-SMO-50-355-900	0.14	0.57	2.27	3.54	5.10
SIL-GL-SMO-50-355-1000	0.16	0.64	2.57	4.02	5.79
SIL-GL-SMO-50-355-1200	0.26	1.05	4.19	6.54	9.42
SIL-GL-SMO-50-355-1500	0.33	1.33	5.34	8.34	12.01
SIL-GL-SMO-50-400-600	0.09	0.37	1.50	2.34	3.37
SIL-GL-SMO-50-400-900	0.13	0.52	2.07	3.24	4.67
SIL-GL-SMO-50-400-1000	0.15	0.59	2.34	3.66	5.27
SIL-GL-SMO-50-400-1200	0.25	1.00	3.99	6.24	8.99
SIL-GL-SMO-50-400-1500	0.33	1.31	5.22	8.16	11.75
SIL-GL-SMO-50-450-600	0.08	0.34	1.34	2.10	3.02
SIL-GL-SMO-50-450-900	1.20	4.80	19.20	30.00	43.20
SIL-GL-SMO-50-450-1000	0.14	0.56	2.23	3.48	5.01
SIL-GL-SMO-50-450-1200	0.24	0.96	3.84	6.00	8.64
SIL-GL-SMO-50-450-1500	0.31	1.25	4.99	7.80	11.23
SIL-GL-SMO-50-500-600	0.07	0.29	1.15	1.80	2.59
SIL-GL-SMO-50-500-900	0.11	0.43	1.73	2.70	3.89
SIL-GL-SMO-50-500-1000	0.12	0.50	2.00	3.12	4.49
SIL-GL-SMO-50-500-1200	0.23	0.91	3.65	5.70	8.21
SIL-GL-SMO-50-500-1500	0.30	1.21	4.84	7.56	10.89
SIL-GL-SMO-50-560-900	0.10	0.39	1.57	2.46	3.54
SIL-GL-SMO-50-560-1000	0.12	0.47	1.88	2.94	4.23
SIL-GL-SMO-50-560-1200	0.22	0.87	3.49	5.46	7.86
SIL-GL-SMO-50-630-900	0.09	0.36	1.42	2.22	3.20
SIL-GL-SMO-50-630-1000	0.11	0.43	1.73	2.70	3.89
SIL-GL-SMO-50-630-1200	0.21	0.84	3.34	5.22	7.52

Silencer for circular smoke extraction systems

SIL-GL-SMO

For SIL-GL-SMO-100 - 100 mm of insulation

Product code	spressure drop [Pa] for flow rate [m/s]				
	2	4	8	10	12
SIL-GL-SMO-100-100-500	0.26	1.04	4.15	6.48	9.33
SIL-GL-SMO-100-100-600	0.28	1.13	4.53	7.08	10.20
SIL-GL-SMO-100-100-900	0.34	1.34	5.38	8.40	12.10
SIL-GL-SMO-100-100-1000	0.35	1.40	5.61	8.76	12.61
SIL-GL-SMO-100-100-1200	0.37	1.50	5.99	9.36	13.48
SIL-GL-SMO-100-125-300	0.19	0.77	3.07	4.80	6.91
SIL-GL-SMO-100-125-500	0.25	0.99	3.96	6.18	8.90
SIL-GL-SMO-100-125-600	0.27	1.08	4.34	6.78	9.76
SIL-GL-SMO-100-125-900	0.33	1.31	5.22	8.16	11.75
SIL-GL-SMO-100-125-1000	0.34	1.36	5.45	8.52	12.27
SIL-GL-SMO-100-125-1200	0.36	1.46	5.84	9.12	13.13
SIL-GL-SMO-100-150-300	0.18	0.72	2.88	4.50	6.48
SIL-GL-SMO-100-150-500	0.24	0.94	3.76	5.88	8.47
SIL-GL-SMO-100-150-600	0.26	1.04	4.15	6.48	9.33
SIL-GL-SMO-100-150-900	0.31	1.25	4.99	7.80	11.23
SIL-GL-SMO-100-150-1000	0.33	1.31	5.22	8.16	11.75
SIL-GL-SMO-100-150-1200	0.35	1.40	5.61	8.76	12.61
SIL-GL-SMO-100-160-300	0.17	0.67	2.69	4.20	6.05
SIL-GL-SMO-100-160-500	0.23	0.91	3.65	5.70	8.21
SIL-GL-SMO-100-160-600	0.25	1.01	4.03	6.30	9.07
SIL-GL-SMO-100-160-900	0.31	1.23	4.92	7.68	11.06
SIL-GL-SMO-100-160-1000	0.32	1.29	5.15	8.04	11.58
SIL-GL-SMO-100-160-1200	0.35	1.38	5.53	8.64	12.44
SIL-GL-SMO-100-200-300	0.16	0.64	2.57	4.02	5.79
SIL-GL-SMO-100-200-500	0.20	0.82	3.26	5.10	7.34
SIL-GL-SMO-100-200-600	0.23	0.91	3.65	5.70	8.21
SIL-GL-SMO-100-200-900	0.28	1.12	4.49	7.02	10.11
SIL-GL-SMO-100-200-1000	0.30	1.18	4.72	7.38	10.63
SIL-GL-SMO-100-200-1200	0.32	1.28	5.11	7.98	11.49
SIL-GL-SMO-100-250-500	0.17	0.67	2.69	4.20	6.05
SIL-GL-SMO-100-250-600	0.19	0.77	3.07	4.80	6.91
SIL-GL-SMO-100-250-900	0.24	0.98	3.92	6.12	8.81
SIL-GL-SMO-100-250-1000	0.26	1.04	4.15	6.48	9.33
SIL-GL-SMO-100-250-1200	0.28	1.13	4.53	7.08	10.20
SIL-GL-SMO-100-250-1500	0.31	1.25	4.99	7.80	11.23
SIL-GL-SMO-100-315-500	0.00	0.00	0.00	0.00	0.00
SIL-GL-SMO-100-315-600	0.14	0.57	2.27	3.54	5.10
SIL-GL-SMO-100-315-900	0.19	0.78	3.11	4.86	7.00
SIL-GL-SMO-100-315-1000	0.21	0.84	3.34	5.22	7.52
SIL-GL-SMO-100-315-1200	0.23	0.93	3.72	5.82	8.38
SIL-GL-SMO-100-315-1500	0.26	1.05	4.19	6.54	9.42

Product code	pressure drop [Pa] for flow rate [m/s]				
	2	4	8	10	12
SIL-GL-SMO-100-355-600	0.11	0.44	1.77	2.76	3.97
SIL-GL-SMO-100-355-900	0.17	0.66	2.65	4.14	5.96
SIL-GL-SMO-100-355-1000	0.18	0.71	2.84	4.44	6.39
SIL-GL-SMO-100-355-1200	0.20	0.81	3.23	5.04	7.26
SIL-GL-SMO-100-355-1500	0.23	0.93	3.72	5.82	8.38
SIL-GL-SMO-100-400-600	0.08	0.32	1.27	1.98	2.85
SIL-GL-SMO-100-400-900	0.13	0.53	2.11	3.30	4.75
SIL-GL-SMO-100-400-1000	0.15	0.59	2.34	3.66	5.27
SIL-GL-SMO-100-400-1200	0.17	0.68	2.73	4.26	6.13
SIL-GL-SMO-100-400-1500	0.20	0.80	3.19	4.98	7.17
SIL-GL-SMO-100-450-600	0.05	0.19	0.77	1.20	1.73
SIL-GL-SMO-100-450-900	0.10	0.40	1.61	2.52	3.63
SIL-GL-SMO-100-450-1000	0.12	0.46	1.84	2.88	4.15
SIL-GL-SMO-100-450-1200	0.14	0.56	2.23	3.48	5.01
SIL-GL-SMO-100-450-1500	0.17	0.67	2.69	4.20	6.05
SIL-GL-SMO-100-500-600	0.02	0.08	0.31	0.48	0.69
SIL-GL-SMO-100-500-900	0.07	0.29	1.15	1.80	2.59
SIL-GL-SMO-100-500-1000	0.09	0.35	1.38	2.16	3.11
SIL-GL-SMO-100-500-1200	0.11	0.44	1.77	2.76	3.97
SIL-GL-SMO-100-500-1500	0.14	0.56	2.23	3.48	5.01
SIL-GL-SMO-100-560-900	0.05	0.19	0.77	1.20	1.73
SIL-GL-SMO-100-560-1000	0.06	0.24	0.98	1.53	2.20
SIL-GL-SMO-100-560-1200	0.09	0.34	1.36	2.13	3.07
SIL-GL-SMO-100-560-1500	0.12	0.46	1.84	2.88	4.15
SIL-GL-SMO-100-630-900	0.02	0.10	0.38	0.60	0.86
SIL-GL-SMO-100-630-1000	0.04	0.14	0.58	0.90	1.30
SIL-GL-SMO-100-630-1200	0.06	0.24	0.96	1.50	2.16
SIL-GL-SMO-100-630-1500	0.09	0.36	1.46	2.28	3.28
SIL-GL-SMO-100-710-1000	0.02	0.08	0.31	0.48	0.69
SIL-GL-SMO-100-710-1200	0.04	0.17	0.69	1.08	1.56
SIL-GL-SMO-100-710-1500	0.07	0.30	1.19	1.86	2.68
SIL-GL-SMO-100-800-1000	0.01	0.04	0.15	0.24	0.35
SIL-GL-SMO-100-800-1200	0.03	0.13	0.54	0.84	1.21
SIL-GL-SMO-100-800-1500	0.06	0.25	1.00	1.56	2.25
SIL-GL-SMO-100-900-1000	0.00	0.01	0.04	0.06	0.09
SIL-GL-SMO-100-900-1200	0.03	0.11	0.42	0.66	0.95
SIL-GL-SMO-100-900-1500	0.06	0.23	0.92	1.44	2.07
SIL-GL-SMO-100-1000-1200	0.03	0.1	0.33	0.48	0.73
SIL-GL-SMO-100-1000-1500	0.05	0.21	0.85	1.35	1.92